SERVICE MANAUL

Wall Mounted Type

DC Inverter

Model No.O2-WTOP09IN

⚠WARNING

This service information is designed for experienced repair technicians only and is not designed for use by the general public.
It does not contain warnings or cautions to advise non-technical individuals of potential dangers in attempting to service a product.
Products powered by electricity should be serviced or repaired only by experienced professional technicians. Any attempt to service or Repair the product or products dealt with in this service information by anyone else could result in serious injury or death

2021 (Qingdao Haier Air Conditioner General corp. , Ltd)
All rights reserved. Unauthorized copying and distribution is a violation of law

Version: V1 Date: 2022-12-05

Contents

1. Introduction..... 1
2. Features 7
3. Specifications 8
4. Sensors list..... 9
5. Piping diagrams.....10
6. Printed circuit board connector wiring diagram.....11
7. Functions and control 14
8. Dimensional drawings 26
9. Center of gravity 26
10. Service Diagnosis 27
11. Circuit diagrams ..... .49
12.Removal Procedure 51

1 Introduction

1.1 Model name explanation

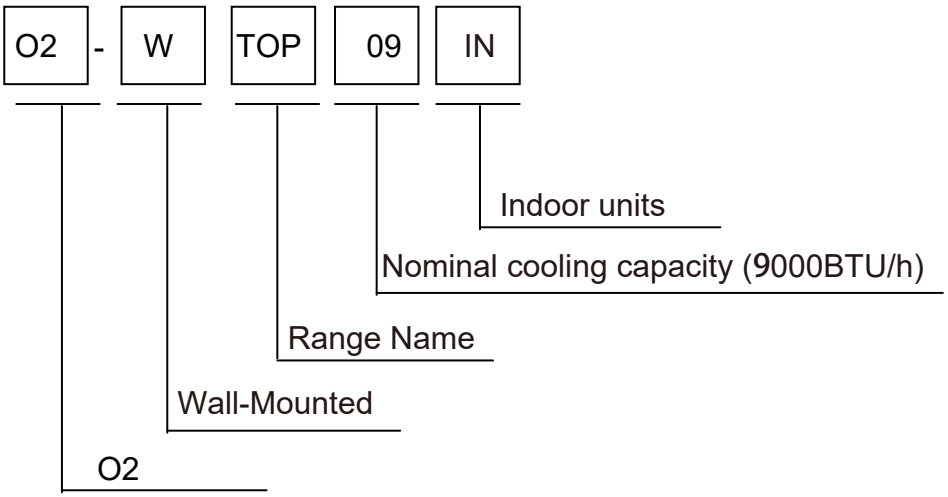

1.2 Safety Cautions

Be sure to read the following safety cautions before conducting repair work.

The caution items are classified into “Warning” and “Caution”. The “Warning” items are especially important since they can lead to death or serious injury if they are not followed closely. The “Caution” items can also lead to serious accidents under some conditions if they are not followed. Therefore, be sure to observe all the safety caution items described below.

About the pictograms

△ This symbol indicates an item for which caution must be exercised.
The pictogram shows the item to which attention must be paid.

○ This symbol indicates a prohibited action.
The prohibited item or action is shown inside or near the symbol.

● This symbol indicates an action that must be taken, or an instruction.
The instruction is shown inside or near the symbol.

After the repair work is complete, be sure to conduct a test operation to ensure that the equipment operates Normally, and explain the cautions for operating the product to the customer.

1.2.1 Embedded wire checking before installation

Check the embedded wire diameter suitable to request:

(Power supply from indoor: 2.5kw ≥1.0mm^2 3.5kw,5kw ≥1.5mm^2 7kw ≥2.5mm^2 ; Power supply from outdoor ≥1.0mm^2)

Check the embedded wire are four roots, L/N/COM/GND; GND is needed, if not, thunder or high voltage wave from power grid will impact to the performance

Using a multi-meter to test short circuit of the four roots wires, make sure no short circuit happen.

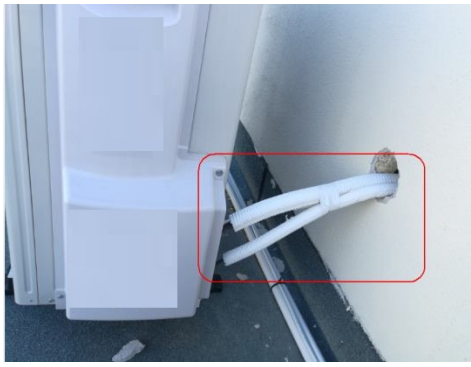

1.2.2 Caution in Repair

Warning	
Be sure to disconnect the power cable plug from the plug socket before disassembling the equipment for a repair. Working on the equipment that is connected to a power supply can cause an electrical shook. If it is necessary to supply power to the equipment to conduct the repair or inspecting the circuits, do not touch any electrically charged sections of the equipment.	
If the refrigerant gas discharges during the repair work, do not touch the discharging refrigerant gas .The refrigerant gas can cause frostbite.	

When disconnecting the suction or discharge pipe of the compressor at the welded section, release the refrigerant gas completely at a well-ventilated place first. If there is a gas remaining inside the compressor , the refrigerant gas or refrigerating machine oil discharges when the pipe is disconnected, and it can cause injury.	
If the refrigerant gas leaks during the repair work, ventilate the area. The refrigerant gas can generate toxic gases when it contacts flames.	
The step-up capacitor supplies high-voltage electricity to the electrical components of the outdoor unit. Be sure to discharge the capacitor completely before conducting repair work . A charged capacitor can cause an electrical shock.	
Do not start or stop the air conditioner operation by plugging or unplugging the power cable plug. Plugging or unplugging the power cable plug to operate the equipment can cause an electrical shock or fire.	

Warning	
Do not repair the electrical components with wet hands . Working on the equipment with wet hands can cause an electrical shock	
Do not clean the air conditioner by splashing water. Washing the unit with water can cause an electrical shock.	
Be sure to provide the grounding when repairing the equipment in a humid or wet place, to avoid electrical shock.	
Be sure to turn off the power switch and unplug the power cable when cleaning the equipment. The internal fan rotates at a high speed, and cause injury.	
Do not tilt the unit when removing it. The water inside the unit can spill and wet the furniture and floor.	
Be sure to check that the refrigerating cycle section has cooled down sufficiently before conducting repair work. Working on the unit when the refrigerating cycle section is hot can cause burns.	
Use the welder in a well-ventilated place. Using the welder in an enclosed room can cause oxygen deficiency.	

1.2.3 Cautions Regarding Products after Repair

Warning	
Be sure to use parts listed in the service parts list of the applicable model and appropriate tools to	

conduct repair work. Never attempt to modify the equipment. The use of inappropriate parts or tools can cause an electrical shock, excessive heat generation or fire.	
When relocating the equipment, make sure that the new installation site has sufficient strength to withstand the weight of the equipment. If the installation site does not have sufficient strength and if the installation work is not conducted securely, the equipment can fall and cause injury.	
Be sure to install the product correctly by using the provided standard installation frame. Incorrect use of the installation frame and improper installation can cause the equipment to fall, resulting in injury.	For integral units only
Be sure to install the product securely in the installation frame mounted on a window frame. If the unit is not securely mounted, it can fall and cause injury.	For integral units only

Warning	
Be sure to use an exclusive power circuit for the equipment, and follow the technical standards related to the electrical equipment, the internal wiring regulations and the instruction manual for installation when conducting electrical work. Insufficient power circuit capacity and improper electrical work can cause an electrical shock or fire.	
Be sure to use the specified cable to connect between the indoor and outdoor units. Make the connections securely and route the cable properly so that there is no force pulling the cable at the connection terminals. Improper connections can cause excessive heat generation or fire.	
When connecting the cable between the indoor and outdoor units, make sure that the terminal cover does not lift off or dismount because of the cable. If the cover is not mounted properly, the terminal connection section can cause an electrical shock, excessive heat generation or fire.	
Do not damage or modify the power cable. Damaged or modified power cable can cause an electrical shock or fire. Placing heavy items on the power cable, and heating or pulling the power cable can damage the cable.	
Do not mix air or gas other than the specified refrigerant (R32) in the refrigerant system. If air enters the refrigerating system, an excessively high pressure results, causing equipment damage and injury.	
If the refrigerant gas leaks, be sure to locate the leak and repair it before charging the refrigerant. After charging refrigerant, make sure that there is no refrigerant leak. If the leak cannot be located and the repair work must be stopped, be sure to perform pump-down and close the service valve, to prevent the refrigerant gas from leaking into the room. The refrigerant gas	.

itself is harmless, but it can generate toxic gases when it contacts flames, such as fan and other heaters, stoves and ranges.	
When replacing the coin battery in the remote controller, be sure to disposed of the old battery to prevent children from swallowing it. If a child swallows the coin battery, see a doctor immediately.	

Caution	
Installation of a leakage breaker is necessary in some cases depending on the conditions of the installation site, to prevent electrical shocks.	
Do not install the equipment in a place where there is a possibility of combustible gas leaks. If a combustible gas leaks and remains around the unit, it can cause a fire.	
Be sure to install the packing and seal on the installation frame properly. If the packing and seal are not installed properly, water can enter the room and wet the furniture and floor.	

1.2.4 Inspection after Repair

Warning	
Check to make sure that the power cable plug is not dirty or loose, then insert the plug into a power outlet all the way. If the plug has dust or loose connection, it can cause an electrical shock or fire.	
If the power cable and lead wires have scratches or deteriorated, be sure to replace them. Damaged cable and wires can cause an electrical shock, excessive heat generation or fire.	

Warning	
Do not use a joined power cable or extension cable, or share the same power outlet with other electrical appliances since it can cause an electrical shock, excessive heat generation or fire.	

Caution	
Check to see if the parts and wires are mounted and connected properly, and if the connections at the soldered or crimped terminals are secure. Improper installation and connections can cause excessive heat generation, fire or an electrical shock.	
If the installation platform or frame has corroded, replace it. Corroded installation platform or frame can cause the unit to fall, resulting in injury.	
Check the grounding, and repair it if the equipment is not properly grounded. Improper grounding can cause an electrical shock.	
Be sure to measure the insulation resistance after the repair, and make sure that the resistance is 1 M ohm or higher. Faulty insulation can cause an electrical shock.	
Be sure to check the drainage of the indoor unit after the repair. Faulty drainage can cause the water to enter the room and wet the furniture and floor.	

1.2.4 Using Icons

Icons are used to attract the attention of the reader to specific information. The meaning of each icon is described in the table below:

1.2.5 Using Icons List

Icon	Type of Information	Description
Note	Note	A “note” provides information that is not indispensable, but may nevertheless be valuable to the reader, such as tips and tricks.
Caution	Caution	A “caution” is used when there is danger that the reader, through incorrect manipulation, may damage equipment, loose data, get an unexpected result or has to restart (part of) a procedure.
Warning	Warning	A “warning” is used when there is danger of personal injury.
	Reference	A “reference” guides the reader to other places in this binder or in this manual, where he/she will find additional information on a specific topic.

2.Features

Self Clean: With a new-generation hydrophilic foil, when the air conditioner in cooling or drying mode, the dust on evaporator will be taken away by condensed water flowing rapidly.

Super quiet: Lower noise operation condition

A-PAM DC inverter:With adoption of S-TYPE,S-PAM and PHASE control technology to works more stably at low-frequency,and is more energy-saving,mor powerful at high frequency.

Long distance air supplying:The indoor unit is improved by optimized motor,fan and air duct so as to provide long distance airflow with 12m+ maximum.

-15℃ Heating: When -15℃ can still heating natural

10℃ heating maintenance:Heating Holding 10℃ temperature

Confortable sleep：The setting temperature and the indoor noise can be adjusted to a more comfortable level when you set the “sleep mode” during night sleep.

Super match:One outdoor unit can match two or more indoor unit.

DIY auto mode: Adjust the last fixed operation mode automatically.

Turbo mode: Quick cooling or heating

Auto restart: Automatic return to previous operation conditions after sudden power blackout

24 hours timer: Use the timer function to set on,or off,or from on to off,or from off to on.

Intergrative valve cover:The valve cover is Intergrative.

2-way piping design: The pipe can shoot out both from left or right side.

Easy clean design: The panel is easy to wash and the airflow vents can be detached easily

Double 8 display:The display is Double 8 mode.

3.Specifications

NOMINAL DISTRIBUTION SYSTEM VOLTAGE		
Phase	/	1
Frequency	Hz	50
Voltage	V	220~240V

NOMINAL CAPACITY and NOMINAL INPUT			
		cooling	heating
Capacity rated	KW	2.5(0.8-3.0)	2.8(0.8-3.3)
	Btu/h	8530(2730-10230)	9550(2730-11260)
Power Consumption(Rated)	KW	0.83	0.87
EER/ COP	W/W	3.01	3.21
Annual energy consumption	KWh	143	735
Moisture Removal	m^3/h	$1.0*10^{-3}$	

TECHNICAL SPECIFICATIONS			
Dimensions	H*W*D	mm	708/190/263
Packaged Dimensions	H*W*D	mm	771/255/330
Weight	/	KG	7.4
Gross weight	/	KG	8.8
Color	/	/	White
Sound level	Sound pressure(Hi/Mid/Lo/Si)	dB(A)	38/34/30/24
Piping Connections	Liquid	mm	φ6.35×0.8
	Gas	mm	φ9.52×0.8

TECHNICAL SPECIFICATIONS-PARTS				
			cooling	heating
Fan	Type		Cross flow fan	
	Motor output	W	40	
	Air flow rate(high)	m³/h	490	
	Speed(super/high/low)	rpm	1200/1150/900	
Heat exchanger	Type		ML fin- Φ 7HI-HX tube	
	Segment *stage*fitch		3*12*1.4	
Air direction control			Right,Left,Horizontal,Downward	
Air filter			Removable/Washable/Mildew Proof	

Note: the data are based on the conditions shown in the table below

cooling	heating	Piping length
Indoor: 27℃DB/19℃WB Outdoor: 35℃DB/24℃WB	Indoor:20℃DB Outdoor: 7℃DB/6℃WB	7m

Conversation formulae
Kcal/h= KW×860 Btu/h= KW×3414 cfm=m³/min×35.3

4. Sensors list

type	Description	Qty
Room and pipe sensor	Its used for detecting room and evaporator temperature	1

5. Piping diagrams

Cooling mode

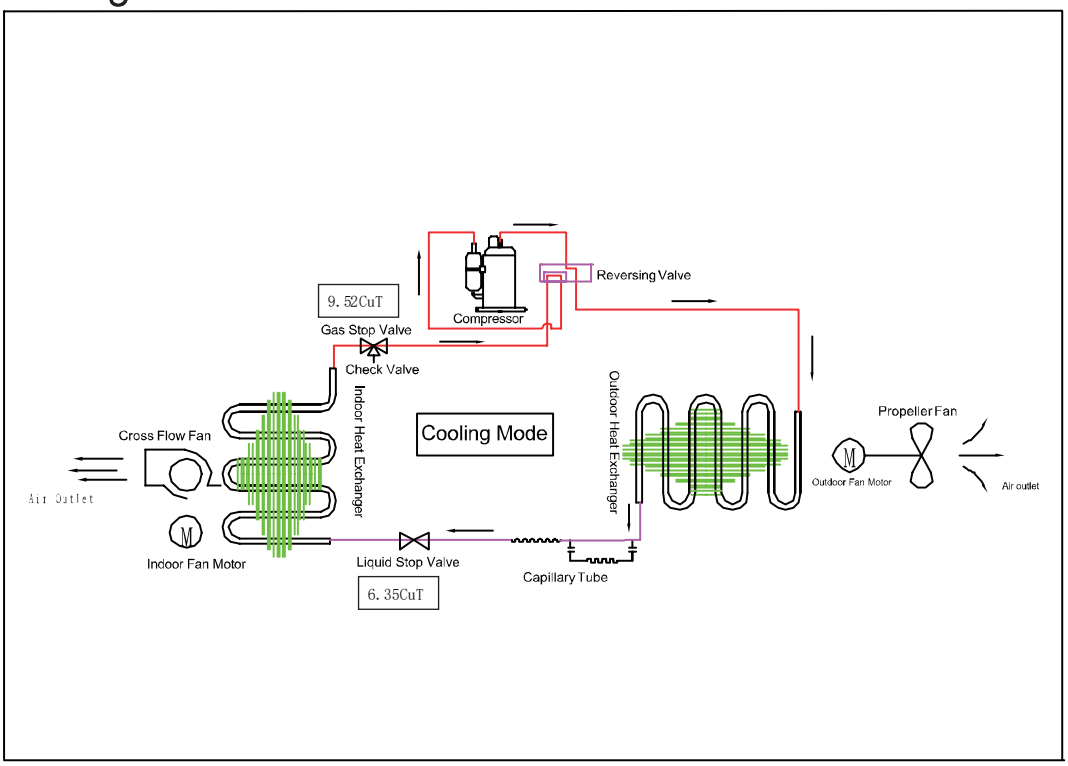

Heating mode

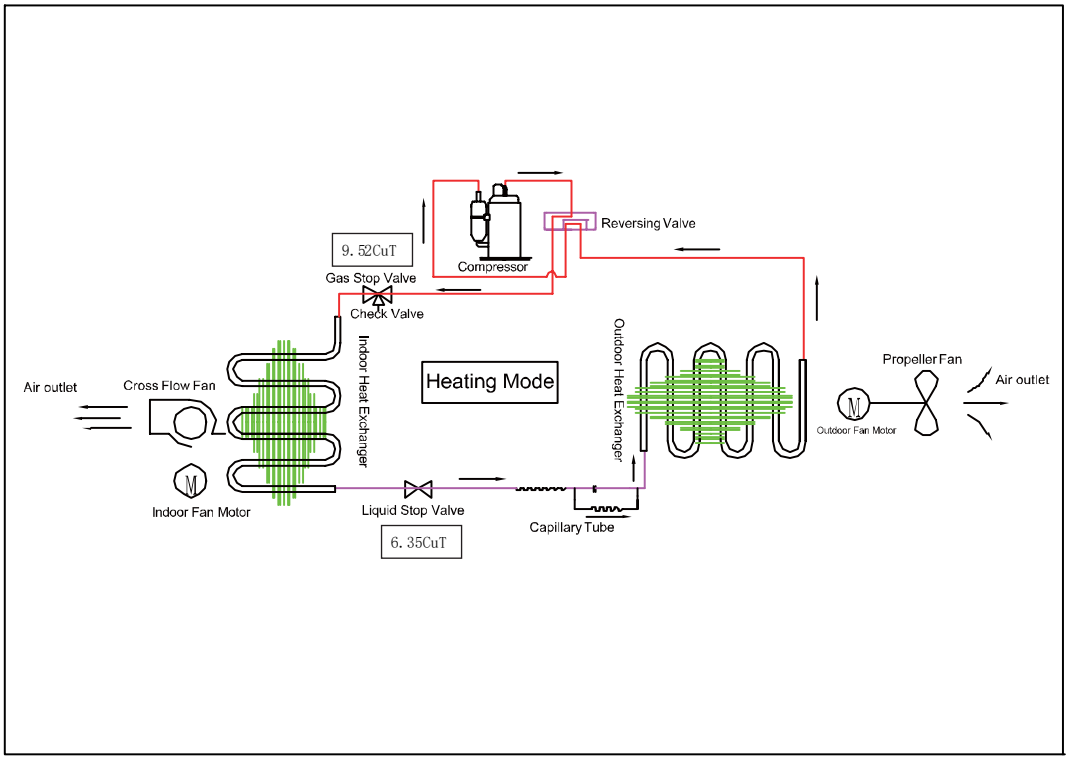

6.Printed circuit board connector wiring diagram

Connectors

PCB

1) CN9、CN8 Connector for fan motor and feedback
2) CN6 Connector for heat exchanger thermistor and Room temperature thermistor
3) CN4/5 Connector for UP&DOWN STEP motor
4) CN17' Connector for indoor power L
5) CN7 Connector for display board
6) CN21、CN22、CN23 Connector for outdoor power N L and C
7) CN35 Connector for Net Module

Note: Other designations

PCB (Indoor Control PCB)

1) SW1 Connector for Forced operation ON / OFF switch
2) FUSE1 Fuse 3.15A/250VAC
3) Pin-1: OFF-match A code remote control; ON-match B code remote control
   Pin-2: OFF-no room card control; ON-with room card control
   Pin-3 and Pin-4 combined control, corresponding to 23, 26,32and35of the machine respectively
4) Jumper J1 and J2 combined control, corresponding to different series of display boards; ON means keep; OFF means cut

	OFF	ON	3	ON	OFF	ON	OFF
1	A	B	4	ON	ON	OFF	OFF
2	N_RC	RC		26	32	23	35

J1	ON	ON	OFF	OFF
J2	OFF	ON	ON	OFF
DISPLAY SERIES	387/1045	325/498	324	317

UNIT MOUDLE	PCB MOUDLE	1	2	3	4	DISPLAY MOUDLE	J1	J2
02-WTOP09IN	0011800722A (32)	OFF	OFF	OFF	ON	0011800498A	ON	ON
02-WTOP12IN	0011800722A (35)	OFF	OFF	OFF	OFF	0011800498A	ON	ON

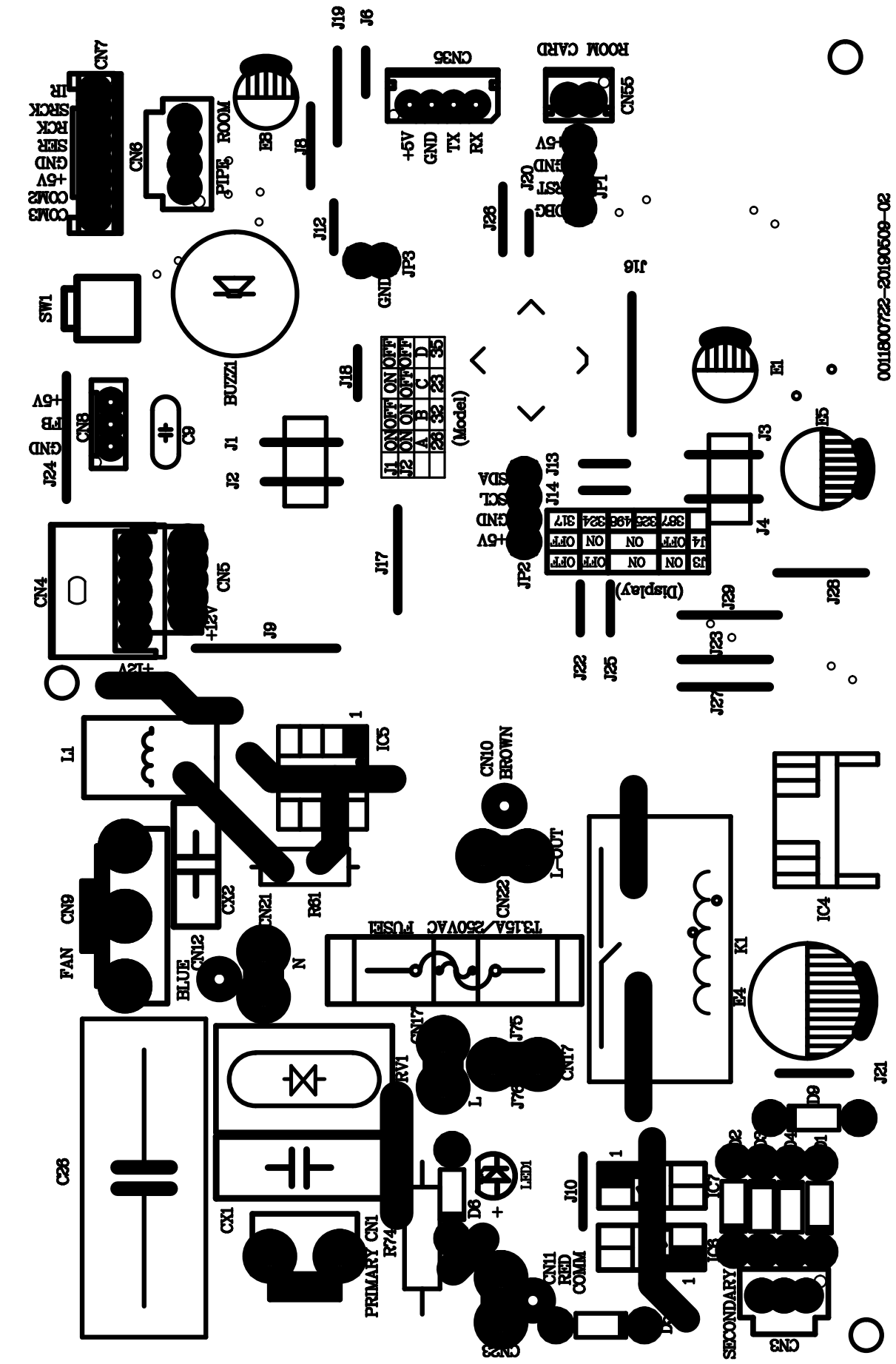
CN7
IR
SRCK
RCK
SER
GND
+5V
COM2
COM3
CN6
PIPE
ROOM
E8
J8
J19
J6
CN35
+5V
GND
TX
RX
ROOM CARD
CN55
+5V
GND
RST
DBG
JP1
J20
J26
J12
JP3
GND
J16
SW1
BUZZ1
J18
J1 ON OFF ON OFF
J2 ON ON OFF OFF
A B C D
26 32 23 35
(Model)
E1
0011800722-20190509-02
+5V
FB
GND
CN8
C9
J24
J1
J2
J3
E5
SDA
SCL
GND
+5V
J14 J13
J4
J3 ON ON OFF OFF
J4 OFF ON ON OFF
387 325 498 324 317
(Display)
JP2
J17
CN4
CN5
+12V
J9
J29
J28
J22
J25
J23
J27
+12V
L1
IC5
CN10
BROWN
L-OUT
CN22
CN9
FAN
CX2
CN21
R61
T3.15A/250VAC FUSE
IC4
K1
E4
BLUE
CN12
N
CN17
J75
CN17
J76
L
RV1
J21
C26
D9
D2
D3
D4
D1
LED1
D6
J10
IC7
CX1
PRIMARY CN1
R74
CN11
RED
COMM
IC3
SECONDARY
CN3
CN23

Wiring diagrams

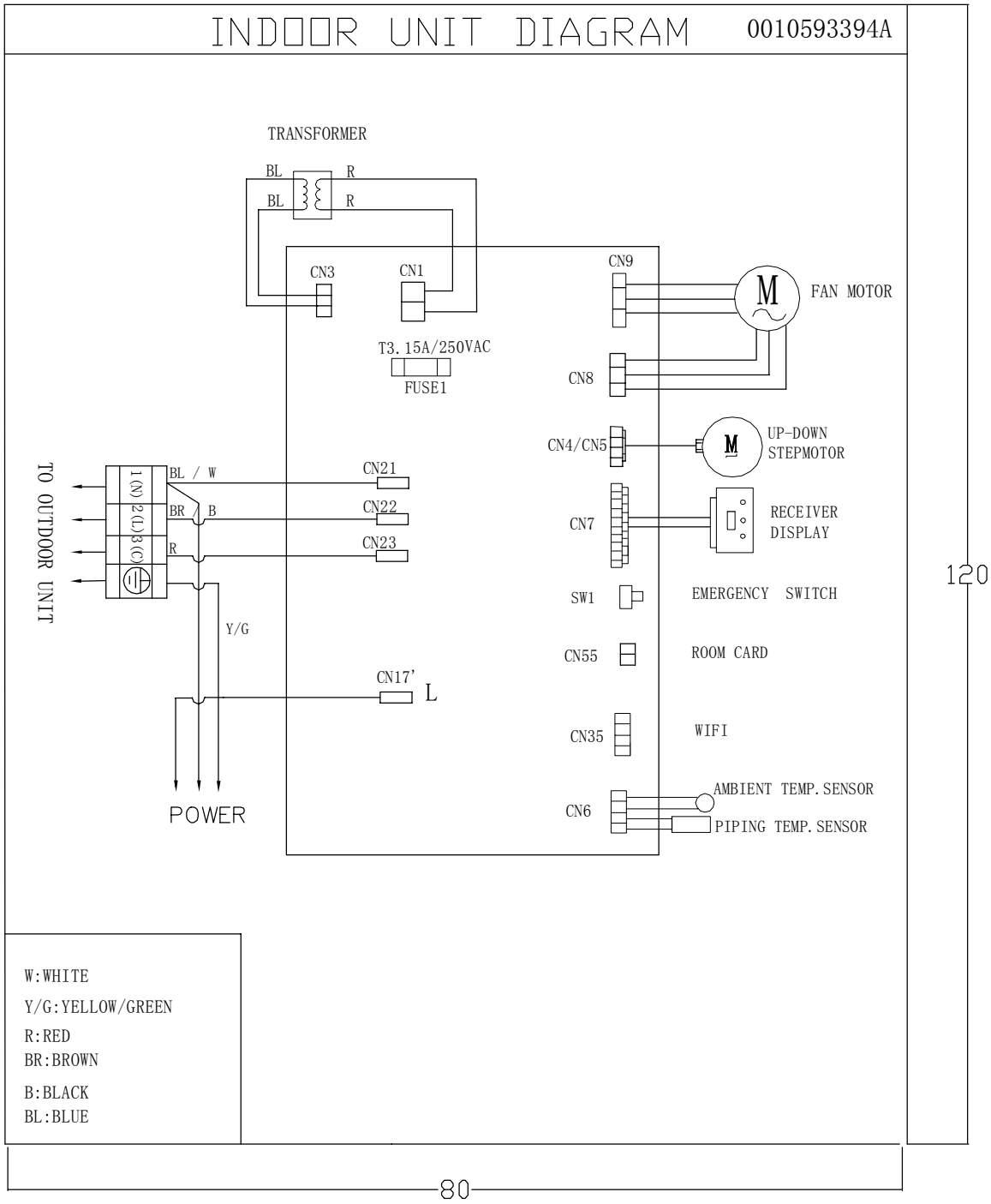

7.Funcitions and control

7.1 Main functions and control specification

7.1.1 Automatic operation

When the running mode is turned to automation after starting the system, the system will first determine the running mode according to the current room temperature and then will run according to the determined mode. Tr in the following selection conditions means room temperature, Ts means setting temperature, Tp means temperature of indoor coil pipe

Tr≥23℃ Choose Cooling Mode

Tr＜23℃ Choose Heating Mode

After turning to the automation mode, the running mode can be switched between cooling mode, fan mode and heating mode according to the change of the indoor ambient temperature. But the automatic conversion between cooling mode and heating mode must be conducted after 15 minutes.

7.1.2 Cooling operation mode

Temperature control range: 16℃---30℃

Temperature difference: ±1℃

* Control features: When Tr（input airflow）>Ts（set temperature）℃, the compressor will be opened, the indoor fan will operate at the set speed and the mode signal will be sent to the outdoor system. When Tr（input airflow）＜Ts（set temperature）℃, the compressor will be opened, the indoor fan will operate at the set speed and the mode signal will be sent to the outdoor system. The system will keep the original status if Tr= Ts.

Airflow speed control: (temperature difference 1℃)

Automatic: When Tr≤Ts+3℃, high speed.

When Ts+1℃≤Tr<Ts+3℃, medium speed

When Tr<Ts+1℃, low speed

When the sensor is off, low speed

When the airflow speed has no delay from the high to low switching, the speed should be delayed for 3 minutes (remain at high speed for 3 minutes.) before the next switch.

Manus: When the system is operating, you can set the high, medium or low speed manually. (When the sensor is on or off, the system will change the speed 2 seconds after receiving the signal.)

*Airgate location control: the location for the airgate can be set according to your needs.

*Defrosting function: preventing the frosting on the indoor heat exchanger (when cooling or dehumidifying). When the compressor works continuously for 1/6 minutes (adaptable in EEPROM) and the temperature of the indoor coils has been below zero centigrade for 10 seconds, the compressor will be stopped and the malfunction will be recorded in the malfunction list. The indoor system will continue to run. When the temperature of the indoor coil is raised to 7℃, the compressor will be restarted again (the requirement of 3 minutes' delay should be satisfied.)

* timing system on/off function.

* Dormant control function.

7.1.3 Dehumidifying mode.

* temperature control range: 16---30℃
* temperature difference: ±1℃

Control feature: send the dehumidifying signal to the outdoor system.

When Tr>Ts+2℃, the compressor will be turned on, the indoor fan will operate at the set speed.

When Tr is between the Ts and Ts+2℃, the outdoor system will operate at the high dehumidifying frequency for 10 minutes and then at the low dehumidifying mode for six minutes. The indoor fan will operate at low speed.

When Tr< Ts, the outsystem will be stopped, the indoor fan will be stopped for 3 minutes and then turned to the low speed option.

All the frequency converses have a ±1℃ difference.

* Wind speed control: Automatic:

When Tr≥ Ts+ 5℃, high speed.

When Ts+3℃≤Tr< Ts+5℃, medium speed.

When Ts+2℃≤Tr< Ts+3℃, low speed.

When Tr<Ts+2℃, light speed.

If the outdoor fan stopped, the indoor fan will be paused for 3 minutes.

If the outdoor fan stopped for more than 3 minutes and the outdoor system still operates, the system will be changed into light speed mode.

When the airflow speed has no delay from the high to low switching, the speed should be delayed for 3 minutes (remain at high speed for 3 minutes.) before the next switch.

Manual: When the sensor is off or Tr< Ts+3℃, the manual operation can not be made. (obligatory automatic operation.)

*Airgate location control: the location for the airgate can be set according to your needs.

*Defrosting function: preventing the frosting on the indoor heat exchanger (when cooling or dehumidifying). When the compressor works continuously for 1/6 minutes (adaptable in EEPROM) and the temperature of the indoor coils has been below zero centigrade for 10 seconds, the compressor will be stopped and the malfunction will be recorded in the malfunction list. The indoor system will continue to run. When the temperature of the indoor coil is raised to 7℃, the compressor will be restarted again (the requirement of 3 minutes' delay should be satisfied.)

* Coil protection (synchronic overheating protection) are installed for the four directions latch malfunctions when dehumidifying.
* Timing system on/off function.
* Dormant control function.

7.1.4 Heating operation mode.

* temperature control range: 16---30℃
* temperature difference: ±1℃
* control feature: the temperature compensation is automatically added and the system will send the heating signals to the outdoor system.

If Tr≤Ts, the outdoor compressor is turned on, the indoor fan will be at the cold air proof mode.

If Tr>Ts+1℃, the outdoor system is turned off, the indoor fan will be at the heat residue sending mode.

If Tr<Ts-1℃, the outdoor system will be turned on again, the indoor fan will be at the cold air proof mode.

*Indoor fan control

manual control: You can choose high, medium, low and automatic speed control.

Automatic: When Tr<Ts, high speed.

When Ts≤Tr≤Ts+2℃, medium speed.

When Tr> Ts+2℃, low speed.

When the airflow speed has no delay from the high to low switching, the speed should be delayed for 3 minutes (remain at high speed for 3 minutes.) before the next switch.

*Airgate location control: the location for the airgate can be set according to your needs.

Coldair proof operation

1. The indoor operation within 4 minutes after the start up is as the following diagram, the air speed can be raised only after the speed has reached a certain level.

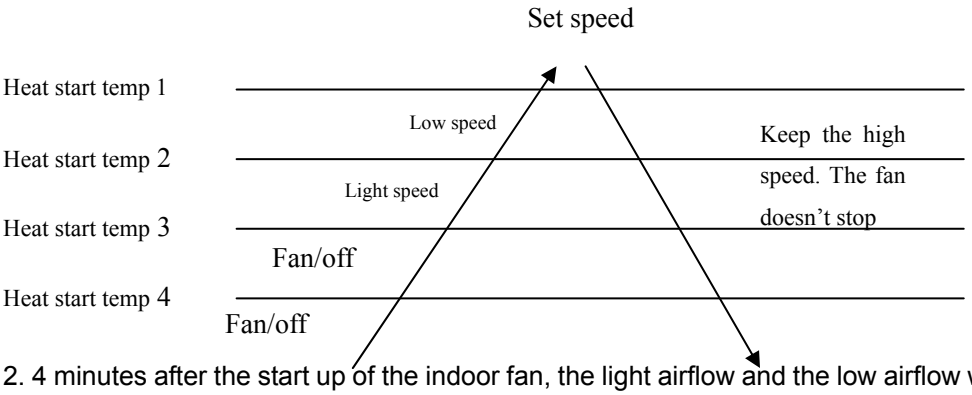

2. 4 minutes after the start up of the indoor fan, the light airflow and the low airflow will be turned to the set speed airflow.

3. In the cold air proof operation, the fan won't stop after the start up.

4. During the cold air proof operation, the indoor system will continuously send 'indoor high speed' signals to the outdoor system.

* Residue heat sending. The indoor fan will send the residue heat at a low speed for 12 seconds.

If other conditions are satisfied, when the compressor stops, the indoor system will operate at a light speed. The indoor fan will stop when the coil temperature is below the 'heat start temp 4'.

* Defrosting. When the system receives the defrosting signal from outdoors, the indoor fan will stop and the indoor temperature display won't change. At the time, any indoor coil malfunctions will be neglected. When the outdoor defrosting finishes, the coil malfunction will still be neglected until the compressor has been started up for 30 seconds. The indoor temperature display will not change and the system operates at the cold air proof mode.

* Automatic heating temperature compensation: when the system enters the heating mode, the temperature compensation (4) will be added. When the status is switched off, the compensation will be erased.

7.1.5 Strength operation

The system enters the mode after receiving the 'strength signal'.

Send strength operation signal to the outdoor system.

The mode change finishes the strength operation.

Entering ‘mute’, you can have normal operation or signal control such as timing to finish the strength operation.

When the system is at the automatic option with the strength/ mute function, if the system enters the cooling mode, the cooling strength/ mute function will be offered; if the system enters the heating mode, then the heating strength/ mute function will be offered; if the system enters the airflow mode, there will be no strength/ mute function.

7.1.6 Mute operation

The system enters the mode after receiving the ‘mute signal’.

a. Mute heating: the airflow speed is slight, the system sends the mute signal to the outdoor system.

b. mute cooling: the airflow speed is slight, the system sends the mute signal to the outdoor system.

When the compressor operates, the airflow speed is mute speed. EEPROM is adaptable.

Mute operation can not work under the dehumidifying and airflow-sending operation.

7.1.7 Air refreshing

After receiving the signal from the remote control, (HV series: the background light of the ‘health’ logo is green. HS series: the ‘health’ indicator will be lighted). If the fan operates, the Nano-Aqua operates to realize the ions sending function.

If the indoor fan stops, the Nano-Aqua is turned off.

When the Nano-Aqua is turned off, if the air refreshing system is turned on, the Nano-Aqua will be turned on when the fan operates.

7.1.8 Timing

You can set 24 hours’ on/off timing accordingly. After the setting, the timing indicator will be lightened. Also, the light will be turning off after the timing is finished. The followings are several timing methods.

1.system /on timing: The timing indicator will be lightened and the indoor system is under the waiting mode. The light will be turned off when the timing is finished and the rest of the system will operate under a normal condition. The timing starts since the last reception of the timing signal.

2.system /off timing: When the system is turned on, the timing indicator is lightened, the rest of the system will operated under a normal condition. When set time comes, the indicator light will be turned off and the system will be turned off. If you have set the dormant functions, the order of your settings will be operated according to the timing settings.

3 .system /on and off timing: The settings will be completed according to the orders..

7.1.9 Dormant operation

The dormant timing is an eight hours unadaptable one. The timing signs are shown on the V series board. (RC series show the dormant signal, the timing light is lighted on the 6 lights board).

2.1 Under the cooling/ dehumidifying operation, after the setting of the dormant operation, the set temperature will be raised for 1 centigrade after 1 hour’s operation and will be raised for 1 centigrade 1 hour later. The system will keep this status for 6 hours and then close.

2.2 Under the heating mode, after the setting of the dormant operation, the setting temperature will fall

2 centigrade after 1 hour's operation and will fall 2 centigrade 1 hour later. 3 hours after the preceding operations, the set temperature will be raised for 1 centigrade and the system will keep this status for 3 hours and then close down.

2.3 During the dormant time, except the change of the system mode or a new press on the dormant setting keys, the timing of the 8 hours dormancy will take the first timing as the start time, any presses on other keys will not affect the original timing.

2.4 Indoor fan control under the dormant operation.

If the indoor fan is at the high speed before the dormant operation setting, the speed will be turned to medium after the setting. If the fan is at the medium speed before the dormant setting, the speed will be turned to low after the setting. If the fan is at the low speed before the dormant setting, the speed will not change.

7.1.10 Urgent on/off input

Press the urgency button the buzzer will ring. The system will enter the automatic mode if you don't press the button for more than 5 seconds.

Under the system off mode, if you press the urgency key for 5 to 10 seconds, the system will start the test operation.

Under the system off mode, if you press the urgency key for 10 to 15 seconds, the display screen will show the resume of the last malfunction.

If the system is under operation, the press on the urgency key will stop it.

Under the system off mode, the display screen will show automatic running sign.

Under the system off mode, the system will not receive the remote control signal if the press on the urgency key doesn't last for 15 seconds or if the key is loosened.

Urgency operation: If you press the urgency key for less than 5 seconds, the buzzer will ring when you press the on/off key. The system will enter the urgency operation when the urgency key is loosened. The urgency operation is fully automatic.

Test operation.

The inlet temperature sensor doesn't work, the indoor fan and the indoor air direction board motor works synchronically. High speed airflow, cooling, outdoor system on, etc, will send the ambient temperature 30 centigrade and coil temperature 16 centigrade information to the outdoor system.

Test operation

The defrost protection of the evaporator doesn't work.

The temperature control doesn't work.

The test operation will be finished in 30 minutes.

The test operation can be stopped by the relative commands from the remote control.

7.1.11 Low load protection control

In order to prevent the frosting of the indoor heat interaction device, the outdoor system will be stopped if the indoor heat interaction temperature is below zero centigrade for 5 minutes, but the fan will continue to operate. The outdoor system will be started again when the heat interaction temperature is above 7 centigrade and the system has been stopped for 3 minutes. The malfunction will be stored in the malfunction resume and will not be revealed

7.1.12 High load protection control

The outdoor system will be stopped if the coil temperature is above 65℃ for 2 minutes. The indoor fan will be controlled by the thermostat. The outdoor system can be restarted when the coil temperature is below 42℃ and the system has been stopped for 3 minutes. The malfunction will be stored in the malfunction resume and will not be revealed.

7.1.13 Abnormal operation of indoor system

When the outdoor system operates, if the indoor system operation differs from the outdoor system, the abnormal operation malfunction will be reported. 10s after the report, the indoor system will be closed.

Outdoor system mode	Indoor system mode	conflicts
cooling	heating	yes
cooling	cooling	no
cooling	airflow	no
heating	heating	no
heating	airflow	yes
heating	cooling	yes

7.1.14 Malfunction list resume.

Nothing is presented if there is no code list.

The malfunction display will automatically finish in 10 seconds.

The remote control only receives the signals for stop. According to the signals, the malfunction resume presentation finishes.

The resume restores after the power supply restores.

7.1.15 Abnormality confirmation approaches

1. indoor temperature sensor abnormality:

Under the operation, the normal temperature ranges from 120 degree to -30 degree. When the temperature goes beyond this range, the abnormality can be confirmed. If the temperature goes back into the range, the system will automatically resume.

2 .indoor heat interaction sensor abnormality:

Under the operation, the normal temperature ranges from 120 degree to -30 degree. When the temperature goes beyond this range, the abnormality can be confirmed. If the temperature goes back into the range, the system will automatically resume.

3 .indoor malfunction:

Out door malfunction: When the indoor system receives the outdoor malfunction codes, it will store the code into E2 for the malfunction list resume. The indoor system will continue to operate according to the original status, the malfunction code will not be revealed or processed.

4. transmission abnormality:

If the indoor system can’t receive the outdoor system for 8 minutes, the communication abnormality

can be confirmed and reported and the outdoor system will be stopped.

7.1.16 Single indoor system operation

* Enter condition: First, set the high speed airflow and 30 centigrade set temperature, then press the dormant keys for 6 times within 7 seconds, the system will feedback with 6 rings.
* After the system enters the separate indoor system operation mode, the indoor system will operate according to the set mode and neglect the communication signals of the outdoor system. However, it has to send signals to the outdoor system.
* Quitting condition: This mode can be quitted after receiving the quitting signal from the remote control or urgency system. The indoor system thus can quit the single operation mode.

7.1.17 Power cut compensation

* Entering condition: Press dormant button 10 times within 7 second, the buzzer will ring 4 times and the present system status will be stored into the EEPROM of the indoor system.
* After entering the power cut compensation mode, the processing of the indoor system should be as the followings:

Remote control urgency signal: operate according to the remote control and the urgent conditions, the present status will be stored into the EEPROM of the indoor system.

* Quitting conditions: Press dormant button 10 times within 7 seconds and the buzzer will ring twice.

7.1.18 Test program

First, connect the test program terminal on the mainboard. Then connect the system to the power circuit. The test program will operate as follows.

HV series display: The buzzer rings for one time—the signal will be sent to outdoor system for 0.5 second— the violet is sent for 0.5-- the background light turns to white—the back ground light turns to white—the background light turns to white—the background light is fully lighted for 0.5 second—LED screen lights for 0.5 second— the step-in motor fully output for 0.5 second—then the motor doesn't output for 0.5 second—the motor fully output again for 0.5 second. The test program finishes.

7.1.19 Time cutting function:

Connect the test program terminal on the mainboard after connecting the system to the power circuit. The CPU of the main control will be 60 times faster.

7.2 Value of thermistor

Room sensor and Pipe Sensor

Room sensor

R25℃=23KΩ

B25℃/50℃=4200KΩ

R25℃=23KΩ+2%					
Temp.(℃)	Resistor（KΩ）	Temp.（℃）	Resistor（KΩ）	Temp.（℃）	Resistor（KΩ）
-20	266.905	18	32.215	56	6.1
-19	250.866	19	30.671	57	5.87
-18	235.895	20	29.21	58	5.65
-17	221.911	21	27.828	59	5.44
-16	208.838	22	26.521	60	5.24
-15	196.609	23	25.283	61	5.04
-14	185.163	24	24.111	62	4.86
-13	174.443	25	23	63	4.68
-12	164.399	26	21.94	64	4.51
-11	154.983	27	20.94	65	4.35
-10	146.153	28	19.99	66	4.19
-9	137.87	29	19.09	67	4.04
-8	130.096	30	18.23	68	3.9
-7	122.799	31	17.42	69	3.76
-6	115.946	32	16.65	70	3.63
-5	109.51	33	15.97	71	3.5
-4	103.462	34	15.22	72	3.38
-3	97.779	35	14.56	73	3.26
-2	92.437	36	13.93	74	3.15
-1	87.415	37	13.34	75	3.04
0	82.691	38	12.77	76	2.94
1	78.248	39	12.23	77	2.84
2	74.067	40	11.71	78	2.74
3	70.133	41	11.22	79	2.65
4	66.43	42	10.76	80	2.56
5	62.943	43	10.31		
6	59.659	44	9.89		
7	56.566	45	9.49		
8	53.651	46	8.1		
9	50.904	47	8.74		
10	48.314	48	8.39		
11	45.872	49	8.05		
12	43.569	50	7.73		
13	41.395	51	7.43		
14	39.343	52	7.14		
15	37.406	53	6.86		
16	35.577	54	6.6		
17	33.848	55	6.34		

R25℃=10KΩ

B25℃/50℃=3700KΩ

Temp.((℃))	Max.(KΩ)	Normal(KΩ)	Min.(KΩ)	Tolerance(℃)	
-30	165.2170	147.9497	132.3678	-1.94	1.75
-29	155.5754	139.5600	125.0806	-1.93	1.74
-28	146.5609	131.7022	118.2434	-1.91	1.73
-27	138.1285	124.3392	111.8256	-1.89	1.71
-26	130.2371	117.4366	105.7989	-1.87	1.70
-25	122.8484	110.9627	100.1367	-1.85	1.69
-24	115.9272	104.8882	94.8149	-1.83	1.67
-23	109.4410	99.1858	89.8106	-1.81	1.66
-22	103.3598	93.8305	85.1031	-1.80	1.64
-21	97.6556	88.7989	80.6728	-1.78	1.63
-20	92.3028	84.0695	76.5017	-1.76	1.62
-19	87.2775	79.6222	72.5729	-1.74	1.60
-18	82.5577	75.4384	68.8710	-1.72	1.59
-17	78.1230	71.5010	65.3815	-1.70	1.57
-16	73.9543	67.7939	62.0907	-1.68	1.55
-15	70.0342	64.3023	58.9863	-1.66	1.54
-14	66.3463	61.0123	56.0565	-1.64	1.52
-13	62.8755	57.9110	53.2905	-1.62	1.51
-12	59.6076	54.9866	50.6781	-1.60	1.49
-11	56.5296	52.2278	48.2099	-1.58	1.47
-10	53.6294	49.6244	45.8771	-1.56	1.46
-9	50.8956	47.1666	43.6714	-1.54	1.44
-8	48.3178	44.8454	41.5851	-1.51	1.42
-7	45.8860	42.6525	39.6112	-1.49	1.40
-6	43.5912	40.5800	37.7429	-1.47	1.39
-5	41.4249	38.6207	35.9739	-1.45	1.37
-4	39.3792	36.7676	34.2983	-1.43	1.35
-3	37.4465	35.0144	32.7108	-1.41	1.33
-2	35.6202	33.3552	31.2062	-1.38	1.31
-1	33.8936	31.7844	29.7796	-1.36	1.29
0	32.2608	30.2968	28.4267	-1.34	1.28
1	30.7162	28.8875	27.1431	-1.32	1.26
2	29.2545	27.5519	25.9250	-1.29	1.24
3	27.8708	26.2858	24.7686	-1.27	1.22
4	26.5605	25.0851	23.6704	-1.25	1.20
5	25.3193	23.9462	22.6273	-1.23	1.18
6	24.1432	22.8656	21.6361	-1.20	1.16
7	23.0284	21.8398	20.6939	-1.18	1.14
8	21.9714	20.8659	19.7982	-1.15	1.12

9	20.9688	19.9409	18.9463	-1.13	1.09
10	20.0176	19.0621	18.1358	-1.11	1.07
11	19.1149	18.2270	17.3646	-1.08	1.05
12	18.2580	17.4331	16.6305	-1.06	1.03
13	17.4442	16.6782	15.9315	-1.03	1.01
14	16.6711	15.9601	15.2657	-1.01	0.99
15	15.9366	15.2770	14.6315	-0.98	0.96
16	15.2385	14.6268	14.0271	-0.96	0.94
17	14.5748	14.0079	13.4510	-0.93	0.92
18	13.9436	13.4185	12.9017	-0.91	0.90
19	13.3431	12.8572	12.3778	-0.88	0.87
20	12.7718	12.3223	11.8780	-0.86	0.85
21	12.2280	11.8126	11.4011	-0.83	0.83
22	11.7102	11.3267	10.9459	-0.81	0.80
23	11.2172	10.8634	10.5114	-0.78	0.78
24	10.7475	10.4216	10.0964	-0.75	0.75
25	10.3000	10.0000	9.7000	-0.75	0.75
26	9.8975	9.5974	9.2980	-0.76	0.76
27	9.5129	9.2132	8.9148	-0.80	0.80
28	9.1454	8.8465	8.5496	-0.84	0.83
29	8.7942	8.4964	8.2013	-0.87	0.86
30	8.4583	8.1621	7.8691	-0.91	0.90
31	8.1371	7.8428	7.5522	-0.95	0.93
32	7.8299	7.5377	7.2498	-0.98	0.97
33	7.5359	7.2461	6.9611	-1.02	1.00
34	7.2546	6.9673	6.6854	-1.06	1.04
35	6.9852	6.7008	6.4222	-1.10	1.07
36	6.7273	6.4459	6.1707	-1.13	1.11
37	6.4803	6.2021	5.9304	-1.17	1.14
38	6.2437	5.9687	5.7007	-1.21	1.18
39	6.0170	5.7454	5.4812	-1.25	1.22
40	5.7997	5.5316	5.2712	-1.29	1.25
41	5.5914	5.3269	5.0704	-1.33	1.29
42	5.3916	5.1308	4.8783	-1.37	1.33
43	5.2001	4.9430	4.6944	-1.41	1.36
44	5.0163	4.7630	4.5185	-1.45	1.40
45	4.8400	4.5905	4.3500	-1.49	1.44
46	4.6708	4.4252	4.1887	-1.53	1.47
47	4.5083	4.2666	4.0342	-1.57	1.51
48	4.3524	4.1145	3.8862	-1.61	1.55
49	4.2026	3.9686	3.7443	-1.65	1.59
50	4.0588	3.8287	3.6084	-1.70	1.62
51	3.9206	3.6943	3.4780	-1.74	1.66

52	3.7878	3.5654	3.3531	-1.78	1.70
53	3.6601	3.4416	3.2332	-1.82	1.74
54	3.5374	3.3227	3.1183	-1.87	1.78
55	3.4195	3.2085	3.0079	-1.91	1.82
56	3.3060	3.0989	2.9021	-1.95	1.85
57	3.1969	2.9935	2.8005	-2.00	1.89
58	3.0919	2.8922	2.7029	-2.04	1.93
59	2.9909	2.7948	2.6092	-2.08	1.97
60	2.8936	2.7012	2.5193	-2.13	2.01
61	2.8000	2.6112	2.4328	-2.17	2.05
62	2.7099	2.5246	2.3498	-2.22	2.09
63	2.6232	2.4413	2.2700	-2.26	2.13
64	2.5396	2.3611	2.1932	-2.31	2.17
65	2.4591	2.2840	2.1195	-2.36	2.21
66	2.3815	2.2098	2.0486	-2.40	2.25
67	2.3068	2.1383	1.9803	-2.45	2.29
68	2.2347	2.0695	1.9147	-2.49	2.34
69	2.1652	2.0032	1.8516	-2.54	2.38
70	2.0983	1.9393	1.7908	-2.59	2.42
71	2.0337	1.8778	1.7324	-2.63	2.46
72	1.9714	1.8186	1.6761	-2.68	2.50
73	1.9113	1.7614	1.6219	-2.73	2.54
74	1.8533	1.7064	1.5697	-2.78	2.58
75	1.7974	1.6533	1.5194	-2.83	2.63
76	1.7434	1.6021	1.4710	-2.88	2.67
77	1.6913	1.5528	1.4243	-2.92	2.71
78	1.6409	1.5051	1.3794	-2.97	2.75
79	1.5923	1.4592	1.3360	-3.02	2.80
80	1.5454	1.4149	1.2942	-3.07	2.84
81	1.5000	1.3721	1.2540	-3.12	2.88
82	1.4562	1.3308	1.2151	-3.17	2.93
83	1.4139	1.2910	1.1776	-3.22	2.97
84	1.3730	1.2525	1.1415	-3.27	3.01
85	1.3335	1.2153	1.1066	-3.32	3.06
86	1.2953	1.1794	1.0730	-3.38	3.10
87	1.2583	1.1448	1.0405	-3.43	3.15
88	1.2226	1.1113	1.0092	-3.48	3.19
89	1.1880	1.0789	0.9789	-3.53	3.24
90	1.1546	1.0476	0.9497	-3.58	3.28
91	1.1223	1.0174	0.9215	-3.64	3.33
92	1.0910	0.9882	0.8942	-3.69	3.37
93	1.0607	0.9599	0.8679	-3.74	3.42
94	1.0314	0.9326	0.8424	-3.80	3.46

95	1.0030	0.9061	0.8179	-3.85	3.51
96	0.9756	0.8806	0.7941	-3.90	3.55
97	0.9490	0.8558	0.7711	-3.96	3.60
98	0.9232	0.8319	0.7489	-4.01	3.64
99	0.8983	0.8088	0.7275	-4.07	3.69
100	0.8741	0.7863	0.7067	-4.12	3.74
101	0.8507	0.7646	0.6867	-4.18	3.78
102	0.8281	0.7436	0.6672	-4.23	3.83
103	0.8061	0.7233	0.6484	-4.29	3.88
104	0.7848	0.7036	0.6303	-4.34	3.92
105	0.7641	0.6845	0.6127	-4.40	3.97
106	0.7441	0.6661	0.5957	-4.46	4.02
107	0.7247	0.6482	0.5792	-4.51	4.07
108	0.7059	0.6308	0.5632	-4.57	4.12
109	0.6877	0.6140	0.5478	-4.63	4.16
110	0.6700	0.5977	0.5328	-4.69	4.21
111	0.6528	0.5820	0.5183	-4.74	4.26
112	0.6361	0.5667	0.5043	-4.80	4.31
113	0.6200	0.5518	0.4907	-4.86	4.36
114	0.6043	0.5374	0.4775	-4.92	4.41
115	0.5891	0.5235	0.4648	-4.98	4.45
116	0.5743	0.5100	0.4524	-5.04	4.50
117	0.5600	0.4968	0.4404	-5.10	4.55
118	0.5460	0.4841	0.4288	-5.16	4.60
119	0.5325	0.4717	0.4175	-5.22	4.65
120	0.5194	0.4597	0.4066	-5.28	4.70

8.Dimensional drawings

unit:mm

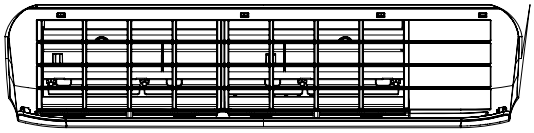

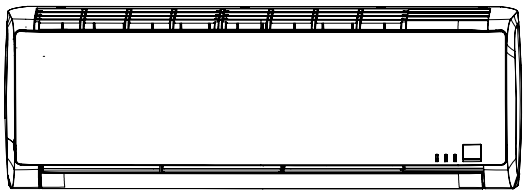

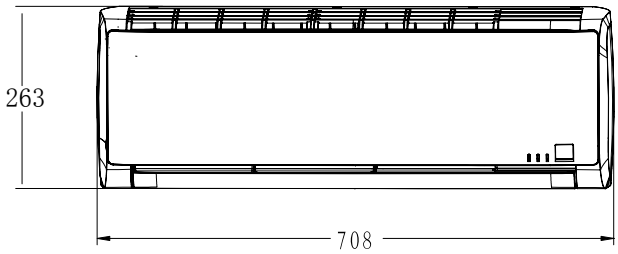

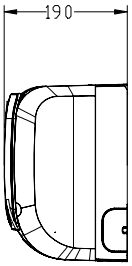

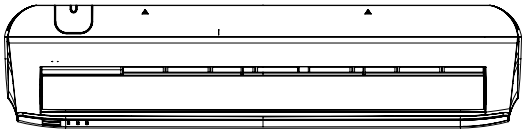

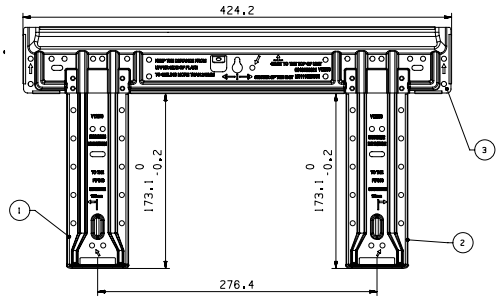

9.Center of gravity

unit:mm

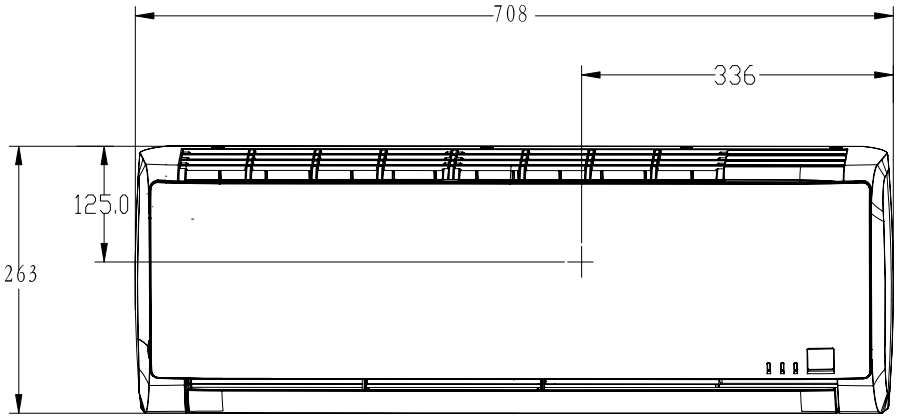

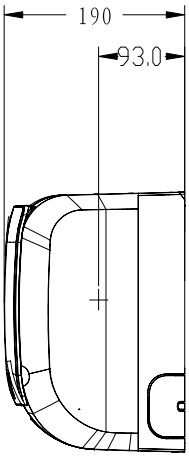

10 Service Diagnosis

10.1 Caution for Diagnosis

The operation lamp flashes when any of the following errors is detected.

1.When a protection device of the indoor or outdoor unit is activated or when the thermistor malfunctions, disabling equipment operation.

2.When a signal transmission error occurs between the indoor and outdoor units.In either case, conduct the diagnostic procedure described in the following pages.

10.2 Problem Symptoms and Measures

Symptom	Check Item	Details of Measure
None of the units operates	Check the power supply.	Check to make sure that the rated voltage is supplied.
	Check the indoor PCB	Check to make sure that the indoor PCB is broken
Operation sometimes stops.	Check the power supply.	A power failure of 2 to 10 cycles can stop air conditioner operation.
Equipment operates but does not cool, or does not heat (only for heat pump)	Check for faulty operation of the electronic expansion valve.	Set the units to cooling operation, and compare the temperatures of the liquid side connection pipes of the connection section among rooms to check the opening and closing operation of the electronic expansion valves of the individual units.
	Diagnosis by service port pressure and operating current.	Check for insufficient gas.
Large operating noise and vibrations	Check the installation condition.	Check to make sure that the required spaces for installation (specified in the Technical Guide, etc.) are provided.

10.3 Parameter of primary electronic appliance

NO	Name	Parameter	Picture
1	Fan motor	Rated voltage: 220-230V Rated current:0.28A Rated frequency: –	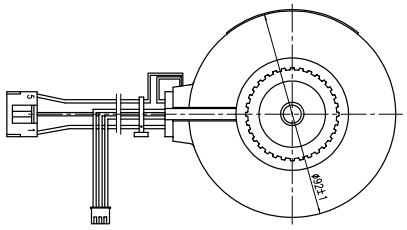

10.4 Error Codes and Description indoor display

Split board: LED1 light of outdoor PCB flash; All-in-one board: LED2 light of outdoor PCB flash

ERROR CODE		OUTDOOR (LED FLASH TIMES)	FAULT DESCRIPTION	SPARE PART
Indoor and Outdoor	E7	15	Communication fault between indoor and outdoor units	Indoor PCB
				Outdoor PCB
				Power module
				Communication wiring
Indoor Malfunction	E1	/	Indoor temperature sensor failure	Room temperature sensor
				Indoor PCB
	E2	/	pipe temperature sensor failure	pipe temperature sensor
				Indoor PCB
	E4	/	Indoor EEPROM failure	Indoor PCB
	E5	22	Indoor anti-frosting protection	pipe temperature sensor
				Indoor PCB
				Indoor motor
	E9	21	Indoor unit overload in heating mode	pipe temperature sensor
				Indoor PCB
				Indoor motor
	E14	/	Indoor fan motor malfunction	Indoor motor
				Indoor PCB
Outdoor Malfunction	F1	2	IPM protection	Power module
				Refrigerant
	F2	24	Instantaneous over-current protection of the compressor	Power module
				Refrigerant
				compressor
	F3	4	Communication error between Power module and main PCB board.	Power module
				Outdoor PCB
	F4	8	Compressor discharging temperature protection	Outdoor PCB
				discharge sensor
	F6	12	outdoor ambient sensor failure	outdoor ambient sensor
	F7	11	Suction temperature sensor failure	Suction temperature sensor
				outdoor PCB
	F8	9	DC fan motor malfunction	outdoor PCB
				outdoor motor
	F9	26	Module reset	Power module
				Outdoor PCB
				compressor
	F11	18	Loss of synchronism detection	The wiring of compressor
				compressor
				Power module
	F12	1	EEPROM failure	Outdoor PCB

ERROR CODE		OUTDOOR (LED FLASH TIMES)	FAULT DESCRIPTION	SPARE PART
Outdoor Malfunction	F13	16	Lack of refrigerant	Refrigerant
	F14	17	4-way valve reverse failure	4-way valve
	F19	6	Power over/under voltage protection	Power module
	F20	5	High pressure protection	Outdoor pipe temperature sensor
				Outdoor PCB
	F21	10	Outdoor coil temperature sensor	Defrost temperature sensor
	F22	3	Outdoor Alternating current over current protection	Power module
				Refrigerant
				compressor
	F23	25	Compressor U-phase overcurrent Compressor V-phase overcurrent Compressor W-phase overcurrent	Power module
				Refrigerant
				compressor
	F24	27	CT detection current abnormal protection	Power module
				Compressor
	F25	13	Abnormal of compressor discharge sensor	discharge sensor
				Outdoor PCB
	F27	7	Compressor current sampling circuit fault	Power module
				Outdoor PCB
				compressor
	F28	19	Compressor position detection circuit fault	Power module
				Outdoor PCB
				compressor
	F35	38	Compressor driver board failure	Power module
				Outdoor PCB
				Compressor
	F43	46	Model matching abnormality	/
Fixed frequency AC	FE	/	Refrigerant leaking detection malfunction	Refrigerant

10.4.1 Thermistor or Related Abnormality

Indoor Display	E1: Room temperature sensor failure E2: Heat-exchange sensor failure
Outdoor display	LED1 flash 10 times：Defrost temperature sensor failure LED1 flash 11 times：Suction temperature sensor failure LED1 flash 12 times：Ambient temperature sensor failure LED1 flash 13 times：Discharge temperature sensor failure
Method of Malfunction Detection	The temperatures detected by the thermistors are used to determine thermistor errors
Malfunction Decision Conditions	When the thermistor input is more than 4.92V or less than 0.08V during compressor operation. ● Note: The values vary slightly in some models
Supposed Causes	■ Faulty connector connection ■ Faulty thermistor ■ Faulty PCB
Trouble shooting	* Caution: Be sure to turn off power switch before connect or disconnect connector, or else parts damage may be occurred.

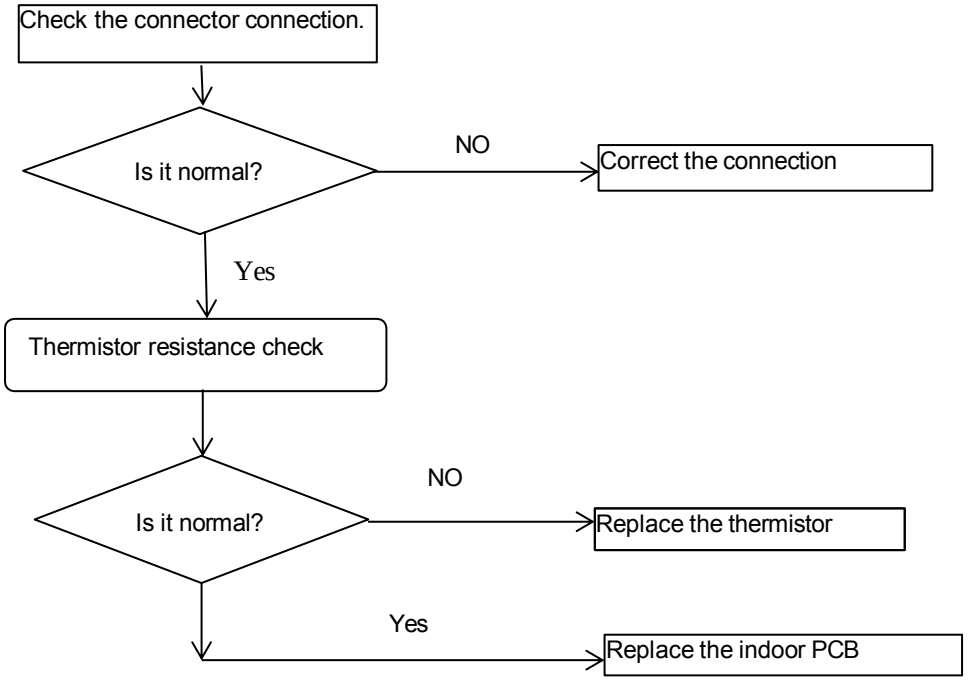

Thermistor resistance inspection method:
Remove the connector of the thermistor on the PCB, and measure the resistance of thermistor using tester. The relationship between normal temperature and resistance is shown in the value of indoor thermistor.

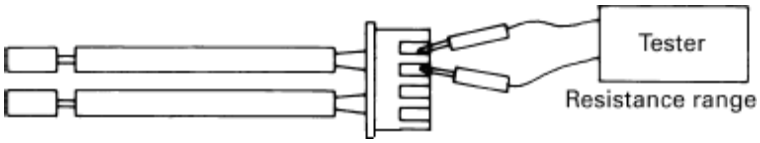

10.4.2 EEPROM abnormal

Indoor Display Indoor display	E4: Indoor EEPROM error F12: Outdoor EEPROM error; Outdoor LED1 flash 1 times
Method of Malfunction Detection	The Data detected by the EEPROM are used to determine MCU
Malfunction Decision Conditions	When the data of EEPROM is error or the EEPROM is damaged
Supposed Causes	■ Faulty EEPROM data ■ Faulty EEPROM ■ Faulty PCB
Trouble shooting	* Caution: Be sure to turn off power switch before connect or disconnect connector, or parts damage may be occurred.

Replace the indoor or outdoor mainboard.

10.4.3 Indoor DC fan motor malfunction

Indoor Display	E14 Indoor DC fan motor malfunction
Method of Malfunction Detection	When the fan motor is running, the speed detected by the Hall IC is used to judge the abnormal operation of the fan motor
Malfunction Decision Conditions	When the detected rotation feedback signal don't received in 2 minutes
Supposed Causes	■ Operation halt due to breaking of wire inside the fan motor. ■ Operation halt due to breaking of the fan motor lead wires ■ Detection error due to faulty indoor unit PCB
Trouble shooting	* Caution: Be sure to turn off power switch before connect or disconnect connector, or else parts damage may be occurred.

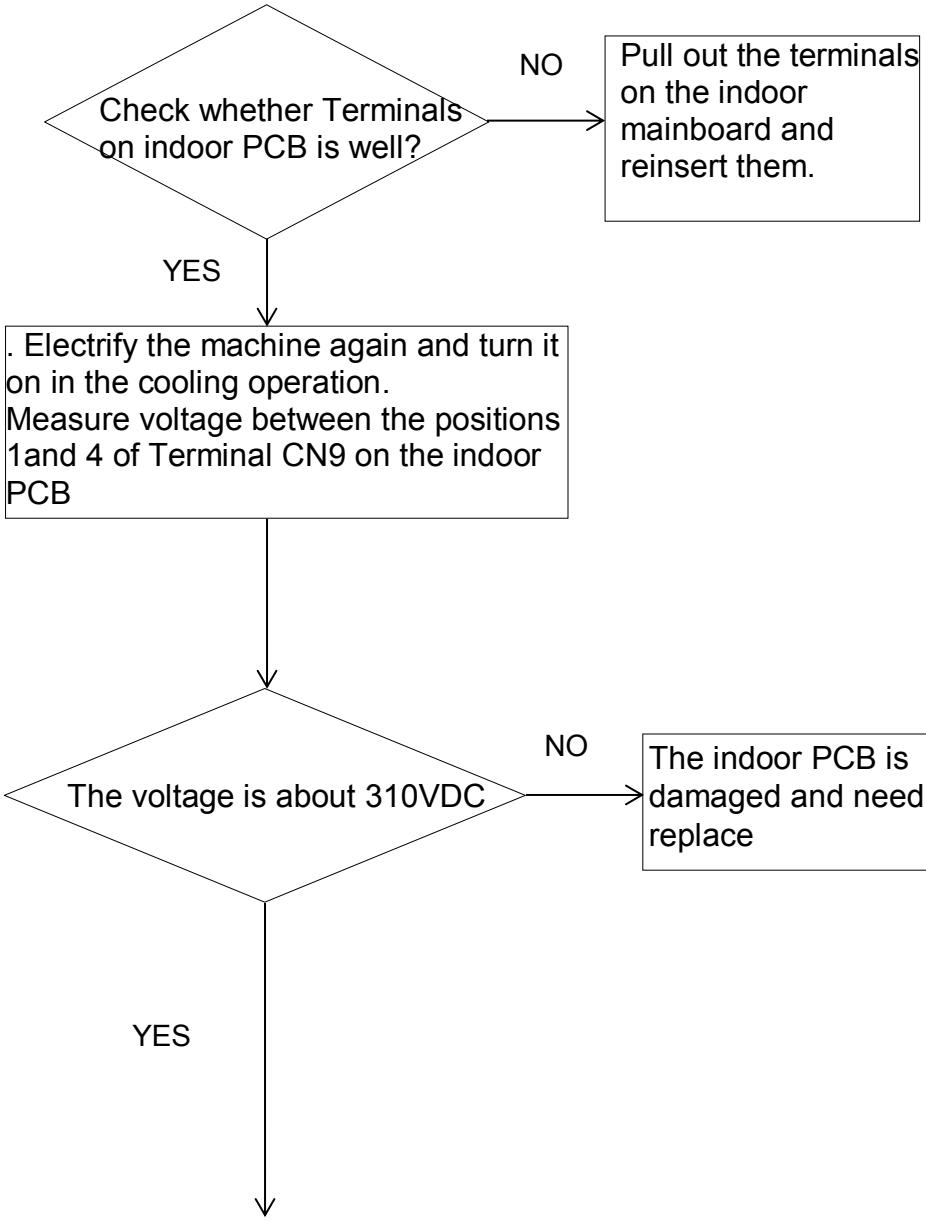

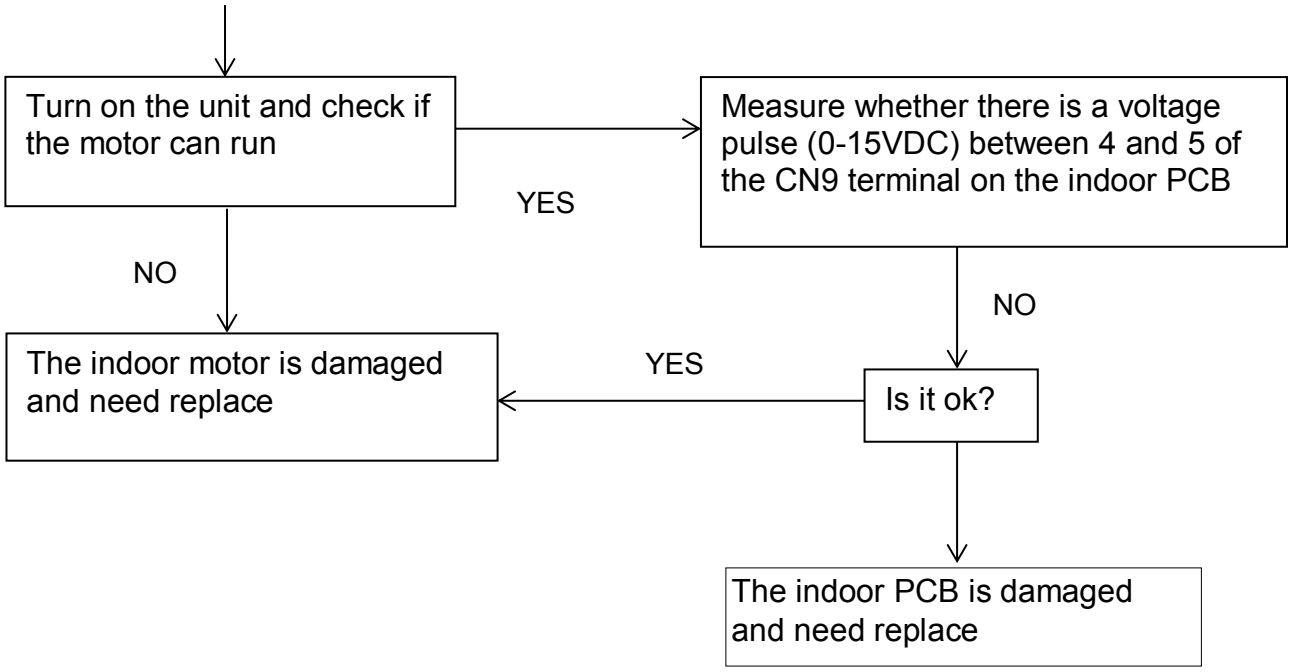

	Color	Signal	Voltage
1	Red	VDC	310V
2	---	---	---
3	---	---	---
4	Black	GND	0V
5	White	VCC	15v
6	Blue	FG	15V
7	Yellow	Vsp	0-6.5V

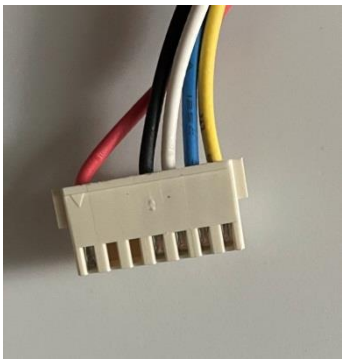

10.4.4 Outdoor DC fan motor fault

Outdoor display	F8 LED1 flash 9 times
Method of Malfunction Detection	DC fan motor is detected by checking the fan running condition and so on
Malfunction Decision Conditions	When the detected rotation feedback signal don't received in2 minutes
Supposed Causes	■ DC fan motor protection dues to the DC fan motor faulty ■ DC fan motor protection dues to faulty PCB
Trouble shooting	* Caution: Be sure to turn off power switch before connect or disconnect connector, or else parts damage may be occurred.

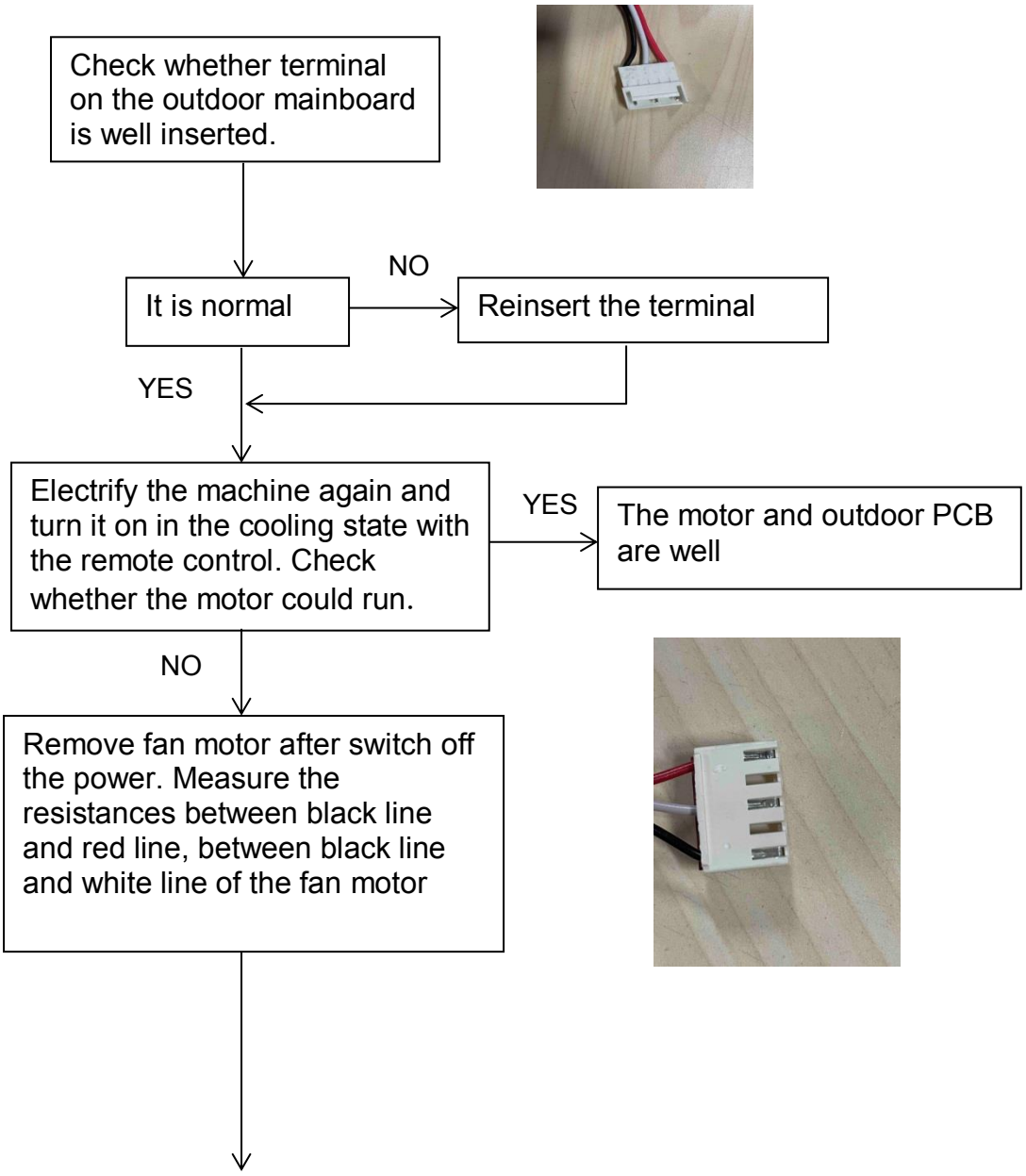

The resistances are more than 40kΩ

YES

The resistances between black line and red line, between black line and white line of the fan terminal of outdoor PCB are greater than 10MΩ

YES

The module PCB is damaged, replace it with a new one.

NO

The motor of the outdoor unit is damaged and needs replacing.

NO

The outdoor PCB is damaged. Replace it with a new one.

10.4.5 IPM protection

Outdoor display: F1 LED1 flash 2 times

Method of Malfunction Detection	IPM protection is detected by checking the compressor running condition and so on
Malfunction Decision Conditions	The system leads to IPM protection due to over current The compressor faulty leads to IPM protection Circuit component of IPM is broken and led to IPM protection
Supposed Causes	■ IPM protection dues to the compressor faulty ■ IPM protection dues to faulty PCB of IPM module ■ Compressor wiring disconnected
Trouble shooting	* Caution: Be sure to turn off power switch before connect or disconnect connector, or else parts damage may be occurred

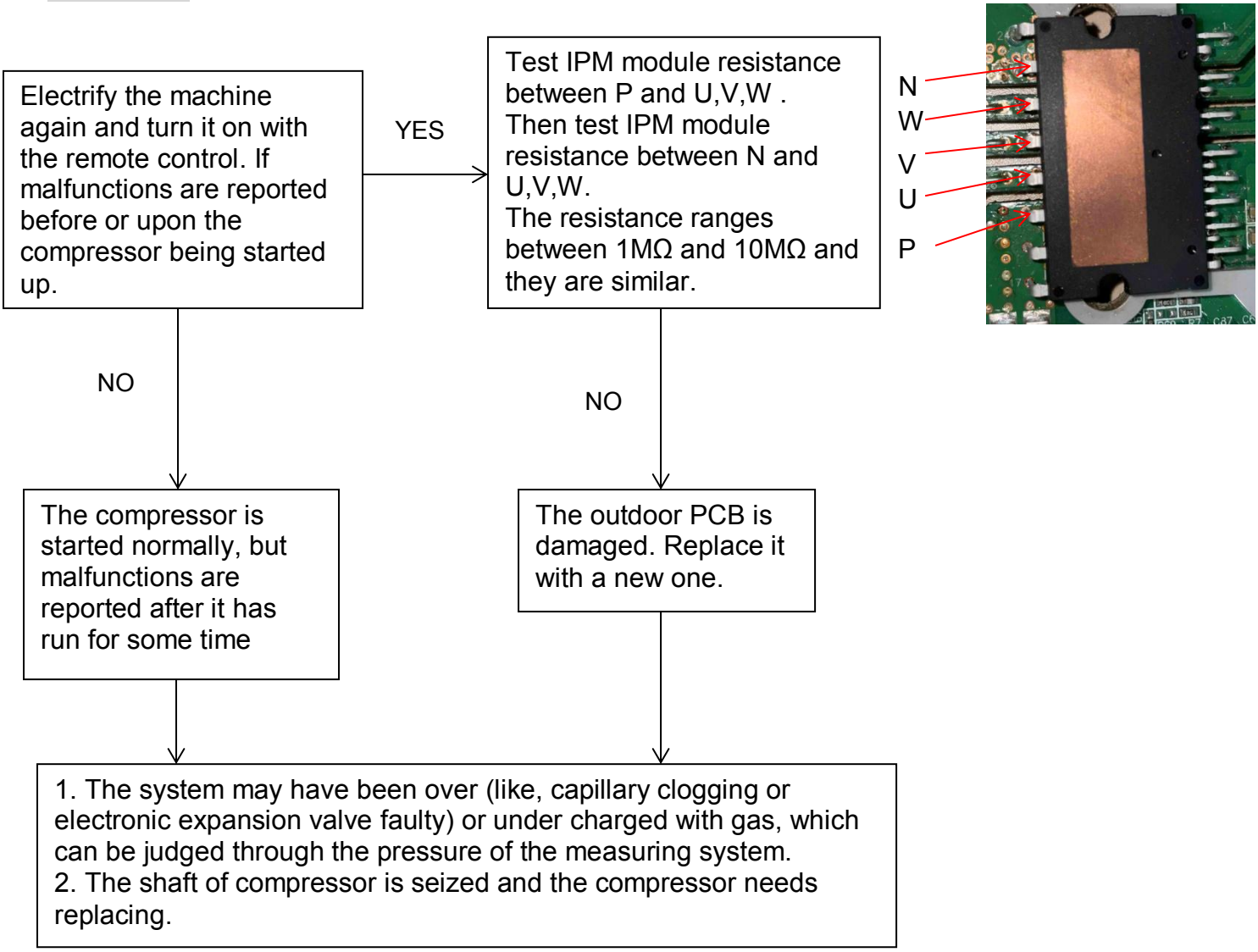

10.4.6 Over-current of the compressor

Outdoor Display	F22, F2, F23 LED1 flash 3 or 24 or 25 times
Method of Malfunction Detection	The current of the compressor is too high
Malfunction Decision Conditions	When the IPM Module is damaged or the compressor is damaged. Power supply voltage is too low or too high
Supposed Causes	■ Faulty IPM Module ■ Faulty compressor ■ Faulty power supply
Trouble shooting	* Caution: Be sure to turn off power switch before connect or disconnect connector, or parts damage may be occurred.

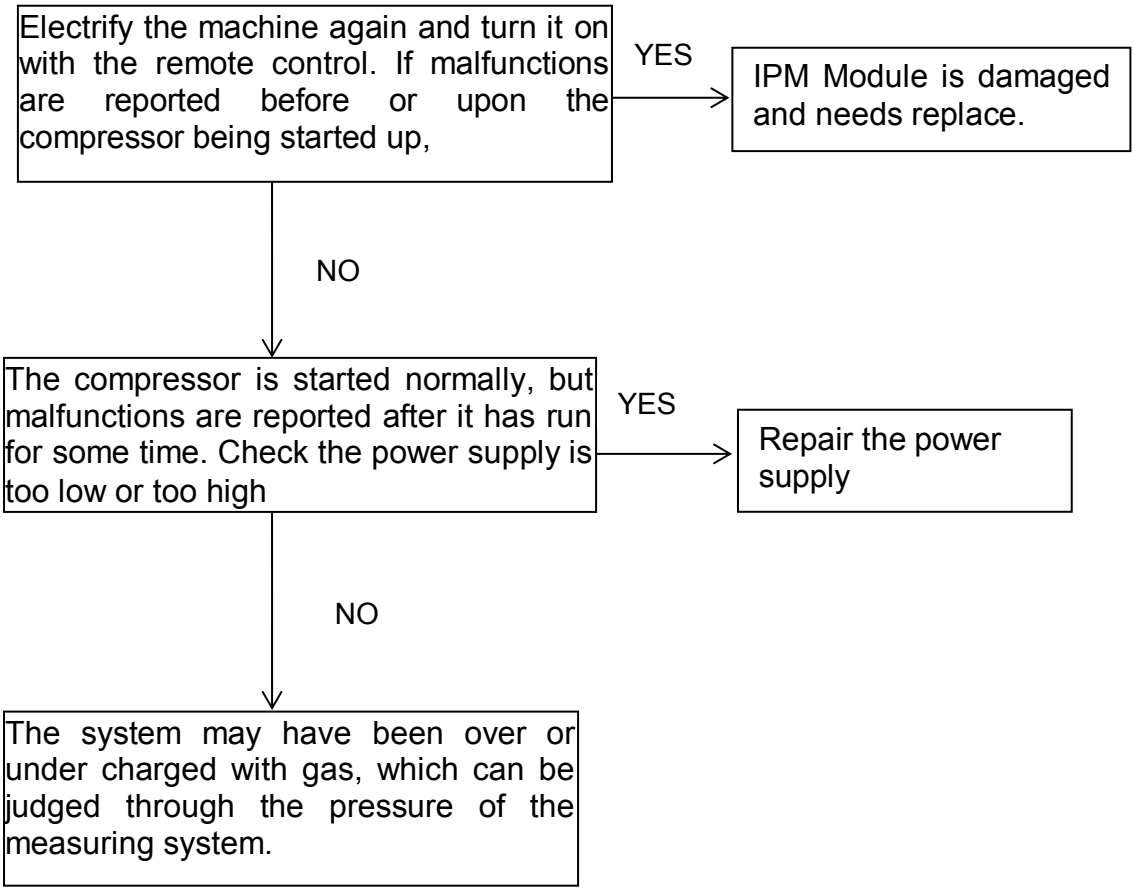

10.4.7 The communication fault between IPM and outdoor PCB

Outdoor display:	F3 LED1 flash 4 times
Method of Malfunction Detection	Communication is detected by checking the IPM module and the outdoor PCB
Malfunction Decision Conditions	■ The outdoor PCB broken leads to communication fault ■ The IPM module broken leads to communication fault
Supposed Causes	■ The outdoor PCB is broken ■ The IPM module is broken ■ Communication wiring disconnected
Trouble shooting	* Caution: Be sure to turn off power switch before connect or disconnect connector, or else parts damage may be occurred.

Check whether the CN23 and CN24 terminals of the outdoor PCB and the CN10 and CN11 terminals of the IPM module are tightly connected.

Check whether the connection between the power module and the outdoor P&N line is tight

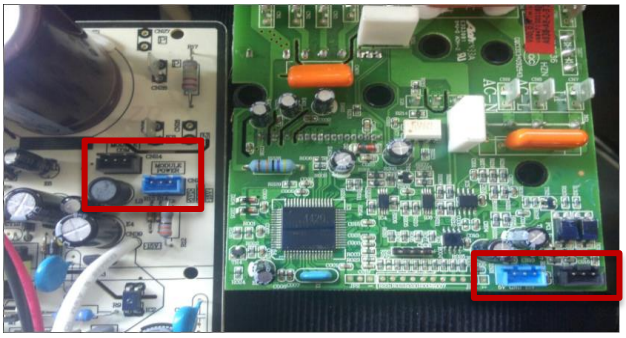

Are they good?

NO → Pull out and reinsert the terminals. Replace connected wire

Malfunction unsolved

Electrify the machine again and turn it on. Check whether the voltage between 1 and 2 of Terminal CN23 is about DC5V. Check whether the voltage between2 and 3 of terminal CN23 is about DC15V.

YES → Replace the outdoor IPM module with a new one.

NO → Replace the outdoor PCB with a new one

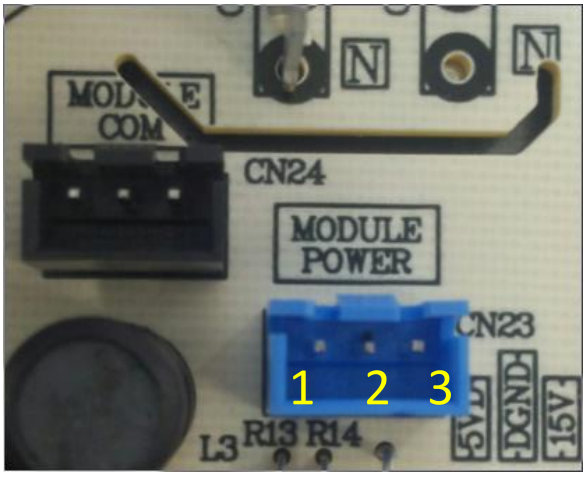

10.4.8 Power Supply Over or under voltage fault

Outdoor display: F19 LED1 flash 6 times

Method of Malfunction Detection	An abnormal voltage rise or fall is detected by checking the specified voltage detection circuit. The power supply is over voltage
Malfunction Decision Conditions	The voltage signal is fed from the voltage detection circuit to the microcomputer
Supposed Causes	■ Supply voltage not as specified ■ the IPM module is broken ■ the outdoor PCB is broken
Trouble shooting	* Caution: Be sure to turn off power switch before connect or disconnect connector, or else parts damage may be occurred.

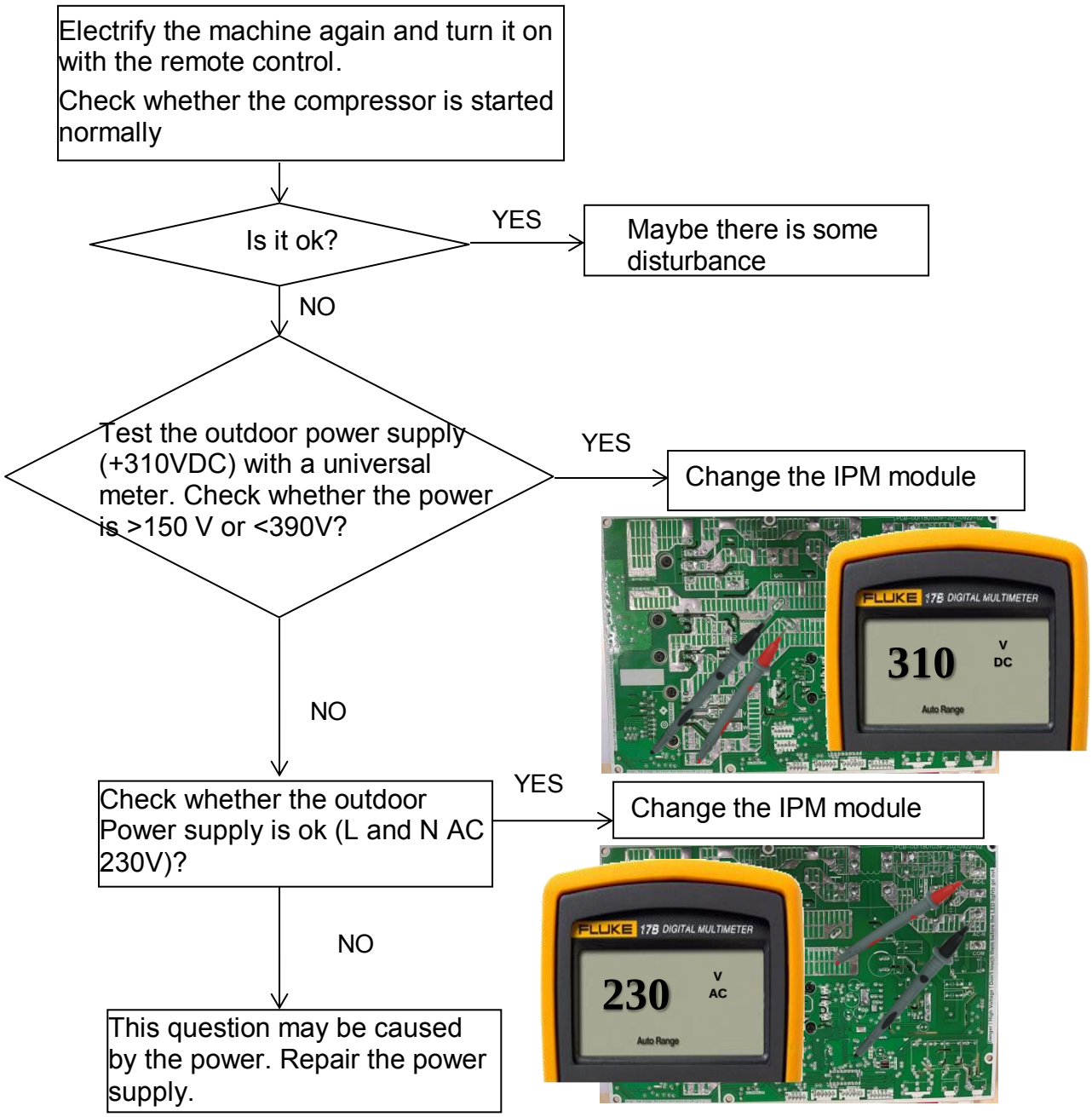

10.4.9 Overheat Protection for Discharge Temperature

Outdoor display: F4 LED1 flash 8 times

Method of Malfunction Detection	Check the control of the discharge temperature by the temperature detected by the discharge pipe thermistor
Malfunction Decision Conditions	When the compressor discharge temperature is above 110℃
Supposed Causes	■ Electronic expansion valve defective ■ Faulty thermistor ■ Faulty PCB
Trouble shooting	* Caution: Be sure to turn off power switch before connect or disconnect connector or else parts damage may be occurred.

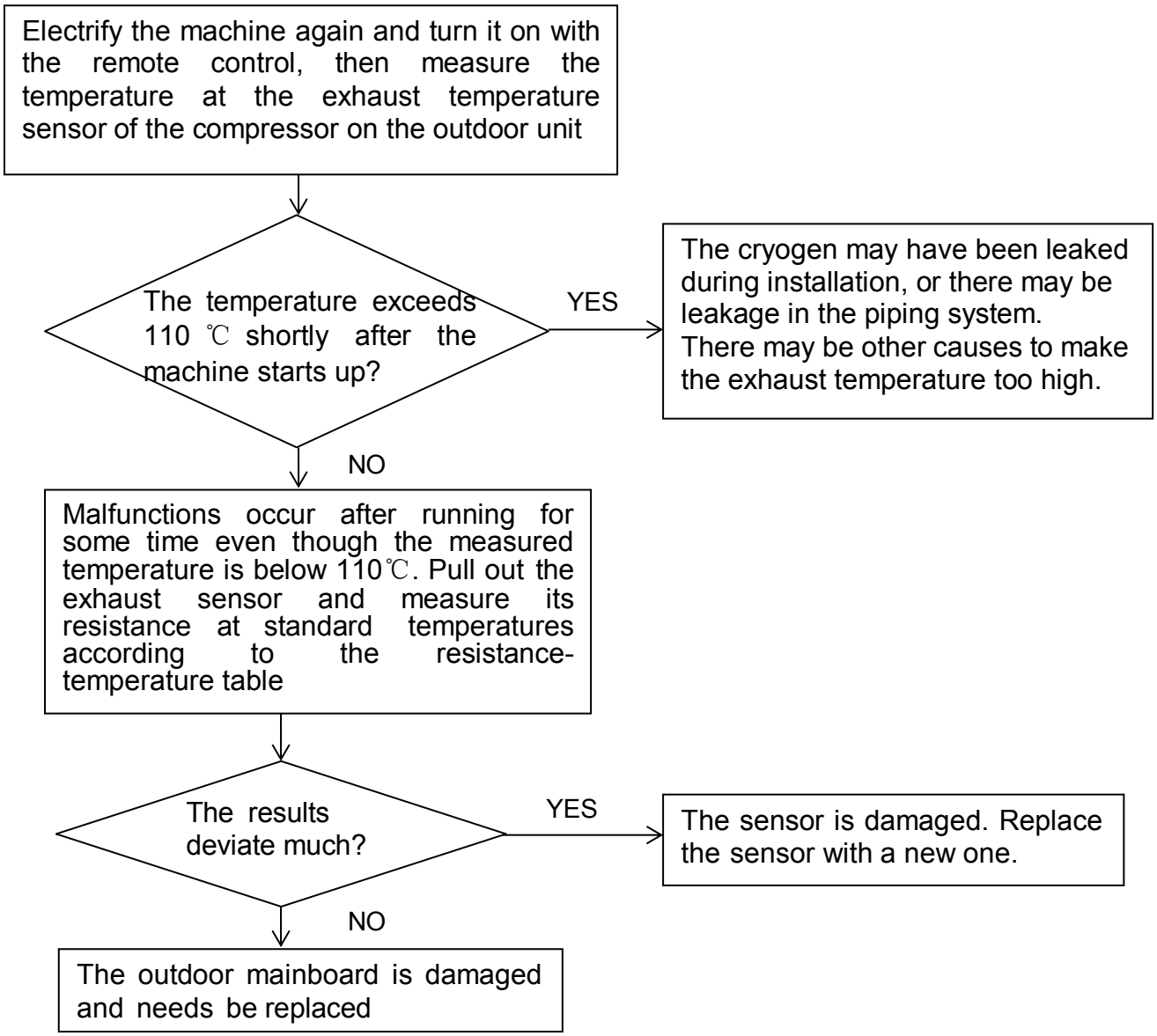

10.4.10 The communication fault between indoor and outdoor

Split board Indoor display E7 outdoor display LED1 flash 15 times

Method of Malfunction Detection	Communication is detected by checking the indoor PCB and the outdoor PCB.
Malfunction Decision Conditions	The outdoor PCB broken leads to communication fault. The indoor PCB broken leads to communication fault.
Supposed Causes	■ Communication wiring disconnected. ■ The indoor PCB is broken. ■ The outdoor PCB is broken. ■ The Power Module is broken.
Trouble shooting	* Caution: Be sure to turn off power switch before connect or disconnect connector, or else parts damage may be occurred.

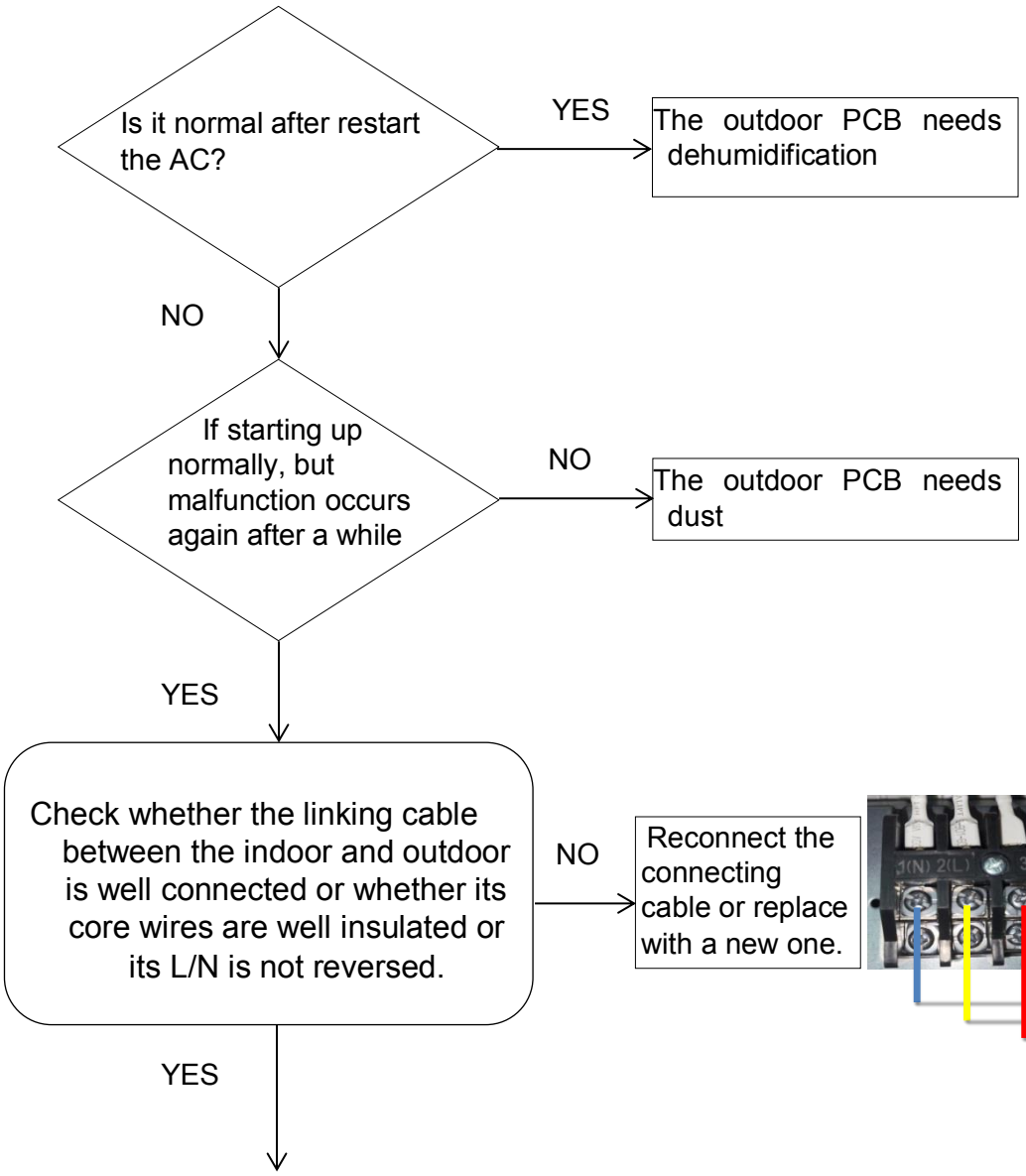

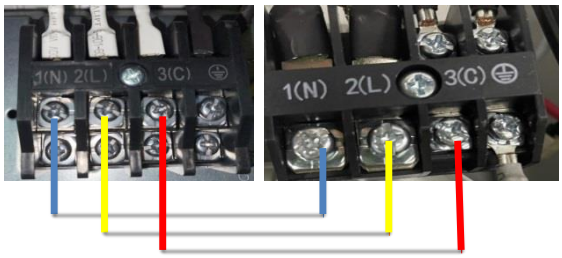

Check the indoor PCB: only indoor charged measure the voltage between 3 and 4 of IC6 on the indoor PCB with a universal meter. And measure the voltage between CN23(S) and CN17 (L) with a universal meter.

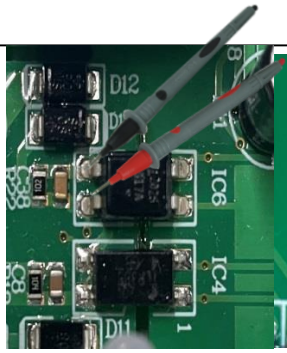

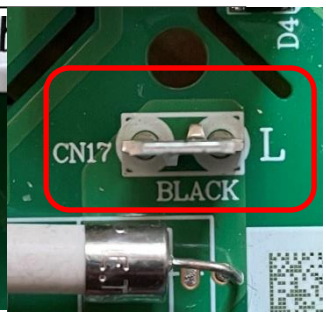

If the voltage is a constant value from DC 0V to DC 5V.Or the voltage between communication line (red) and N (white line) is not close to18V DC when only indoor charged.

YES → The indoor PCB is damaged; replace it with a new one.

NO ↓

Test the outdoor power is supply 230VAC with a universal meter when indoor and outdoor are charged.

NO → Check the cable between outdoor and power

YES ↓

LED2 light of the outdoor

NO → The module PCB is damaged. Replace it with a new one.

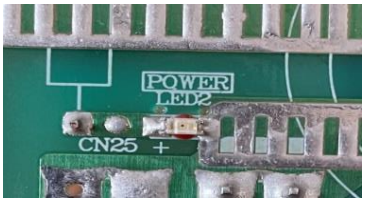

YES ↓

LED 1 light

YES → Measure the voltage between 3 and 4 of IC9 on the Outdoor mainboard with a universal meter .The voltage is a constant value of 0V DC to 5V DC

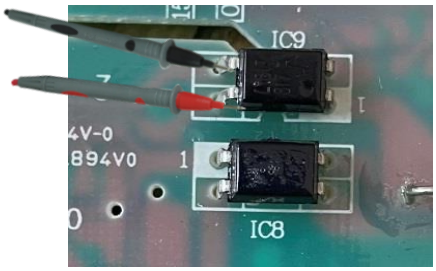

YES → The outdoor PCB is damaged. Replace it with a new one.

NO ↓

Outdoor PCB is ok then check cable.

NO

Remove fan motor after switch off the power and restart the unit, the LED 1 becomes light or flash.

YES

Fan motor is damaged. And replace it with a new one.

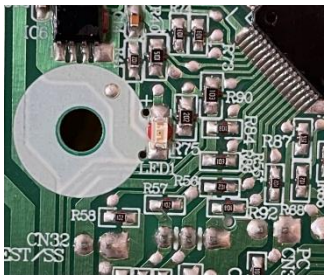

NO

NO

Test the fan motor terminal resistance between pin 1(310V) and pin 4(0V), or pin 5(15V) and pin 4(0V) of CN21 are close to 0mΩ with a universal meter after switch off the power.

	Color	Signal	Voltage
1	Red	VDC	310V
2	---	---	---
3	---	---	---
4	Black	GND	0V
5	White	VCC	15v
6	Blue	FG	15V
7	Yellow	Vsp	0-6.5V

YES

Remove the connection cable between CN23 of outdoor PCB and CN10 of module PCB. The LED1 becomes light or flash.

YES

NO

The outdoor PCB is damaged. Replace it with a new one.

The module PCB is damaged, replace it with a new one.

All-in-one board Indoor display E7 outdoor display LED2 flash 15 times

Method of Malfunction Detection	Communication is detected by checking the indoor PCB and the outdoor PCB.
Malfunction Decision Conditions	■ The outdoor PCB broken leads to communication fault. ■ The indoor PCB broken leads to communication fault.
Supposed Causes	■ Communication wiring disconnected. ■ The indoor PCB is broken. ■ The outdoor PCB is broken.
Trouble shooting	* Caution: Be sure to turn off power switch before connect or disconnect connector, or else parts damage may be occurred.

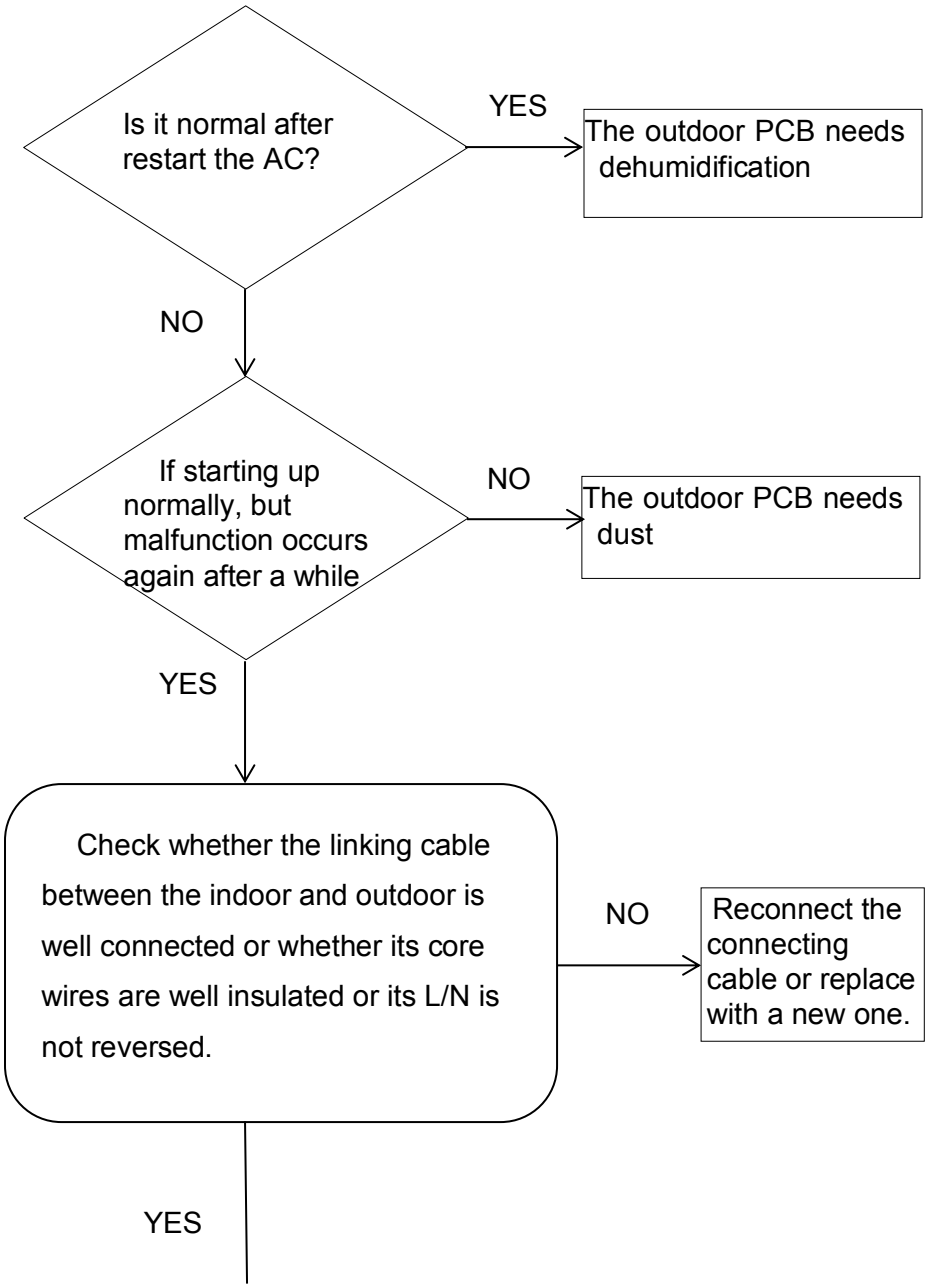

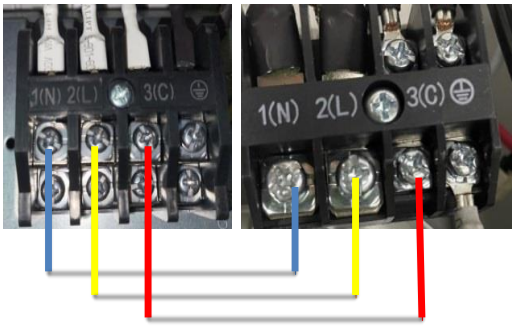

Check the indoor PCB: Only indoor charged measure the voltage between 3 and 4 of IC6 on the indoor mainboard with a universal meter. And measure the voltage between CN23(S) and CN52 (L) with a universal meter.

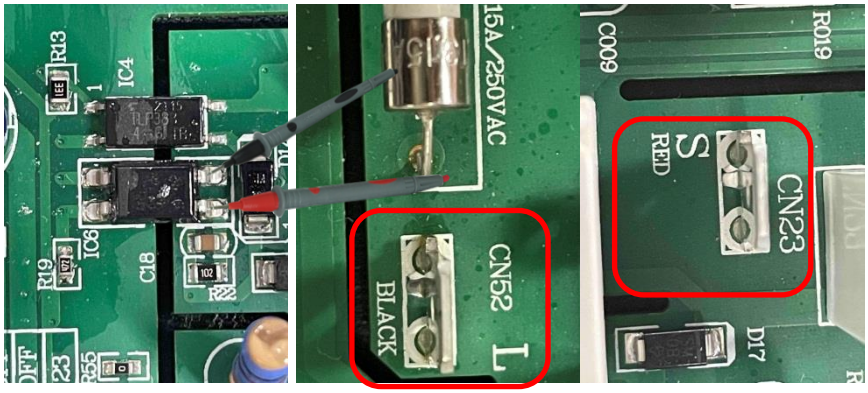

If the voltage is a constant value of 0V DC to 5V DC .Or the voltage between communication line (red) and N (white line) is not close to18V DC when only indoor charged.

YES → The indoor PCB is damaged; replace it with a new one.

NO

Test the outdoor power is supply 230VAC with a universal meter when indoor and outdoor are charged.

NO → Check the cable between outdoor and power

YES

LED2 light

YES → Measure the voltage Between 3 and 4 of IC5 on the Outdoor mainboard with a universal meter. The voltage is a constant value of 0V DC to 5V DC

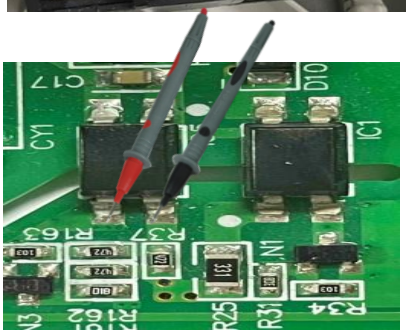

YES → The outdoor PCB is well, and then check the cable

NO → The outdoor PCB is damaged. Replace it with a new one.

NO

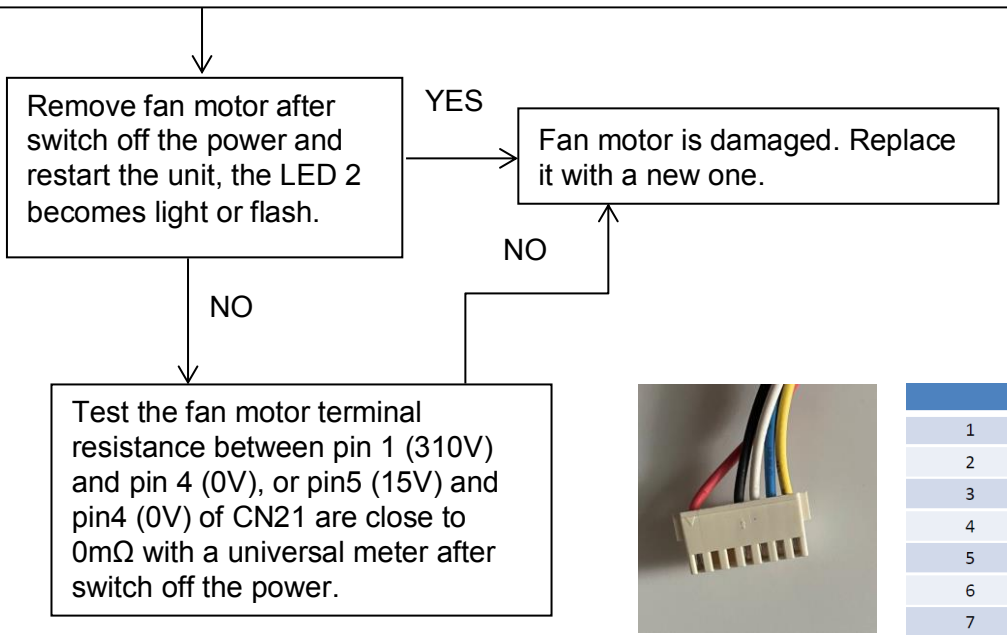

	Color	Signal	Voltage
1	Red	VDC	310V
2	---	---	---
3	---	---	---
4	Black	GND	0V
5	White	VCC	15v
6	Blue	FG	15V
7	Yellow	Vsp	0-6.5V

10.4.11 Loss of synchronism detection (Compressor position detection circuit fault)

Outdoor Display	F11 LED1 flash 18 times F28 LED1 flash 19 times
Method of Malfunction Detection	The position of the compressor rotor can't detected normally
Malfunction Decision Conditions	When the wiring of compressor is wrong or the connection is poor; Or the compressor is damaged
Supposed Causes	■ Faulty The wiring of compressor ■ Faulty compressor ■ Faulty PCB
Trouble shooting	* Caution: Be sure to turn off power switch before connect or disconnect connector, or parts damage may be occurred.

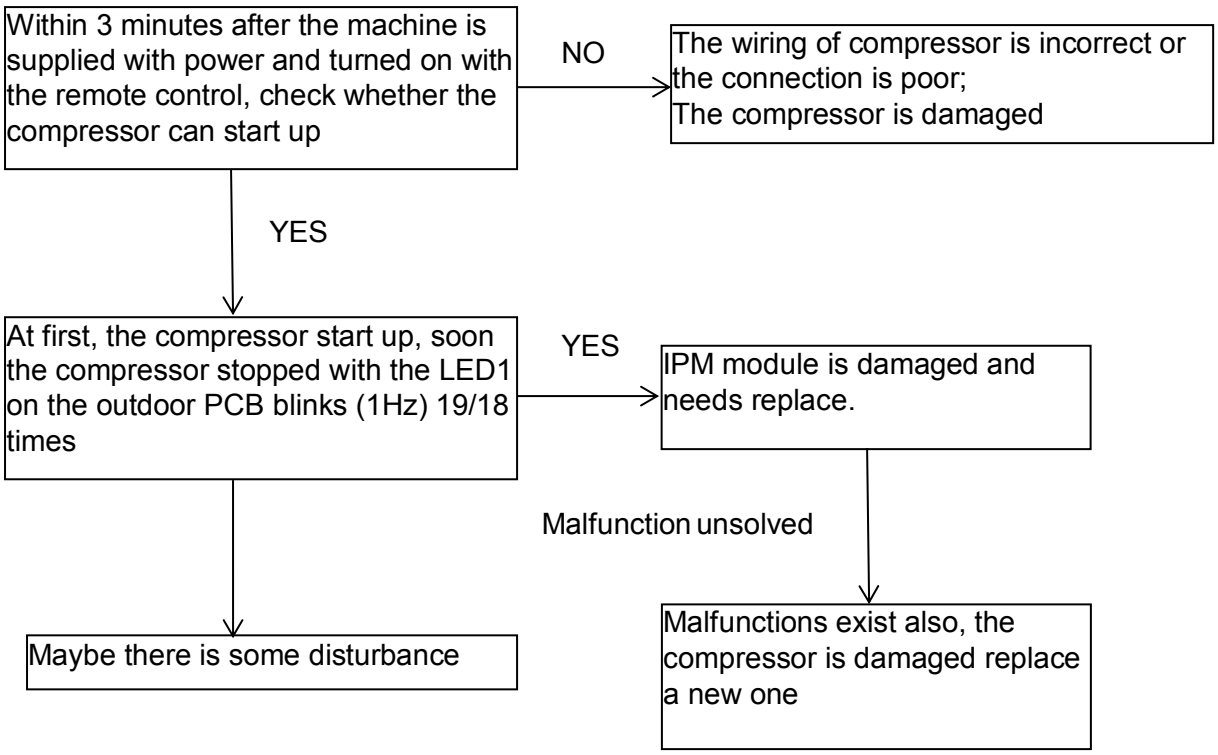

10.4.12 High work-intense protection

Outdoor display	E9 LED1 flash 21 times
Method of Malfunction Detection	High work-intense control is activated in the heating mode if the temperature being sensed by the heat exchanger thermistor exceeds the limit.
Malfunction Decision Conditions	Activated when the temperature being sensed by the heat exchanger rises above 65℃ twice in 30 minutes
Supposed Causes	■ Faulty electronic expansion valve ■ Dirty heat exchanger ■ Faulty heat-exchange sensor ■ Insufficient gas
Trouble shooting	* Caution: Be sure to turn off power switch before connect or disconnect connector, or parts damage may be occurred.

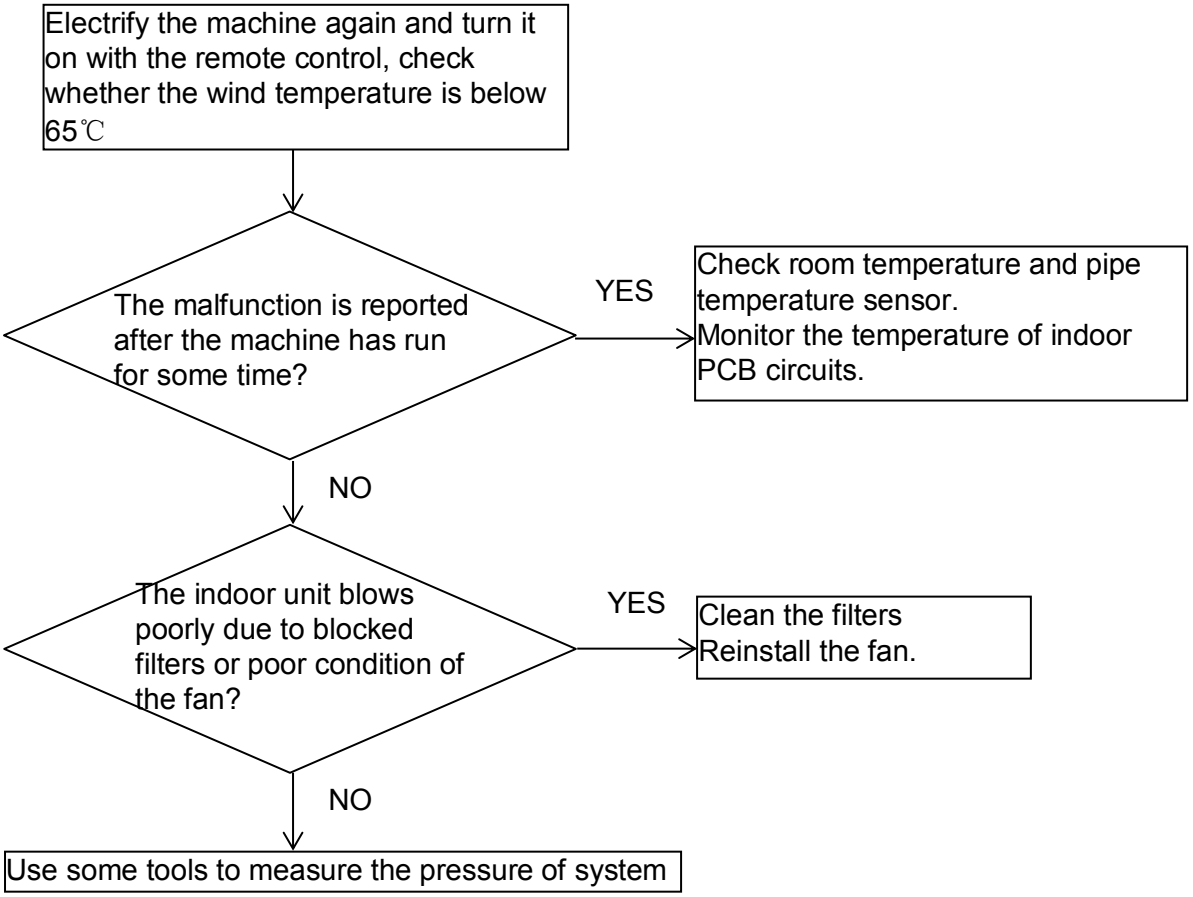

11. Circuit Diagrams

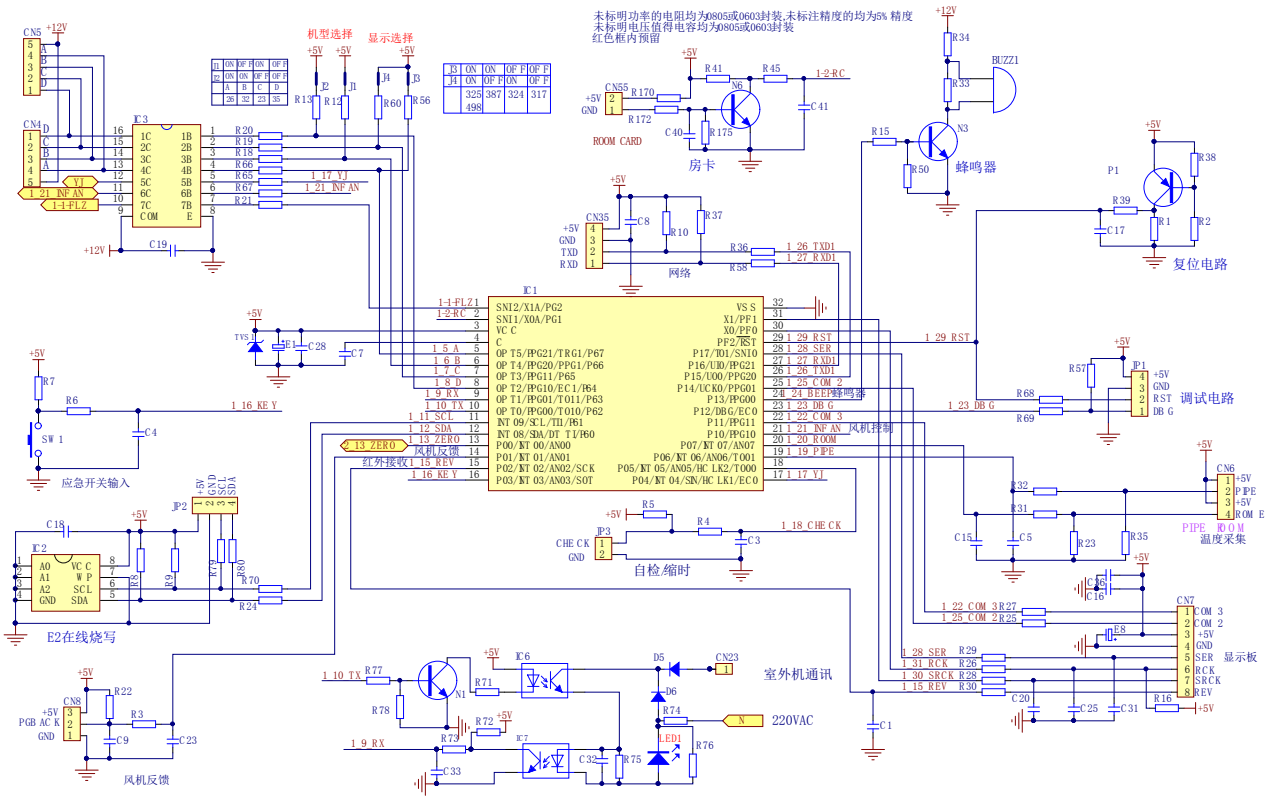

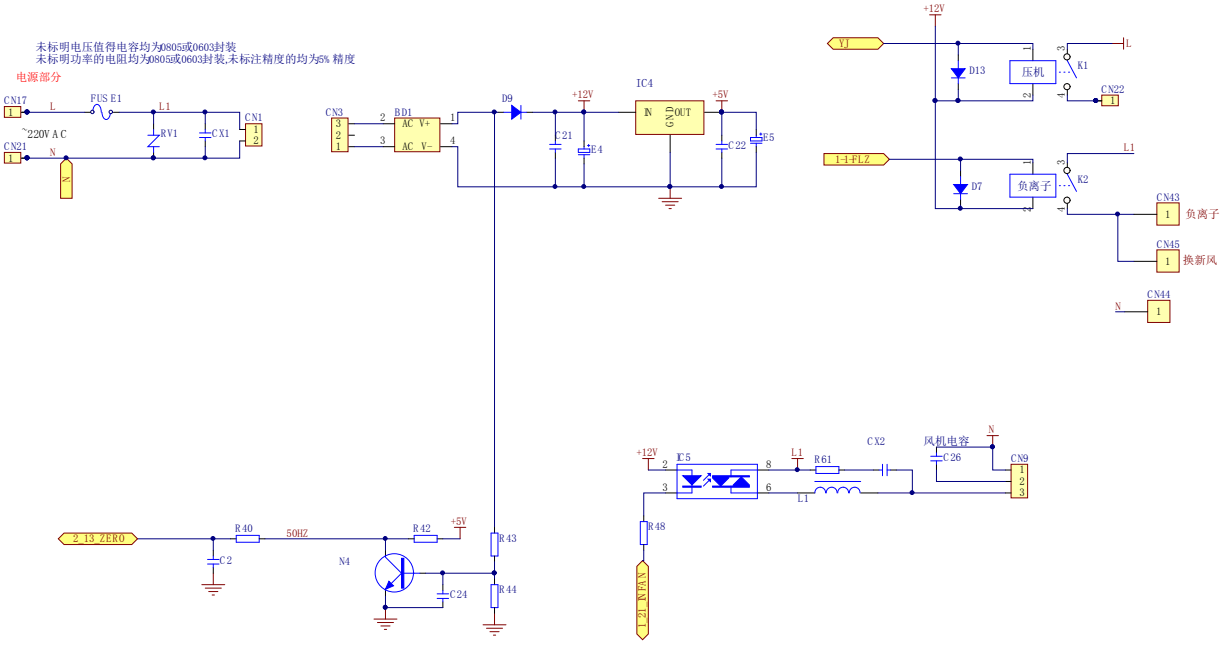
未标明电压值得电容均为0805或0603封装
未标明功率的电阻均为0805或0603封装,未标注精度的均为5% 精度
电源部分
CN17
CN21
L
N
FUS E1
L1
RV1
CX1
CN1
~220V A C
CN3
BD1
AC V+
AC V-
D9
+12V
C21
E4
IC4
IN
GND
OUT
+5V
C22
E5
YJ
D13
压机
K1
CN22
1-1-FLZ
D7
负离子
K2
CN43
CN45
换新风
CN44
IC5
R61
CX2
风机电容
C26
CN9
R48
1_21_INFAN
2_13_ZERO
R40
50HZ
C2
N4
R42
R43
R44
C24

12. Removal Procedure

DRemove of front panel

Indoor unit

Step		Procedure	Points
1.Features			
		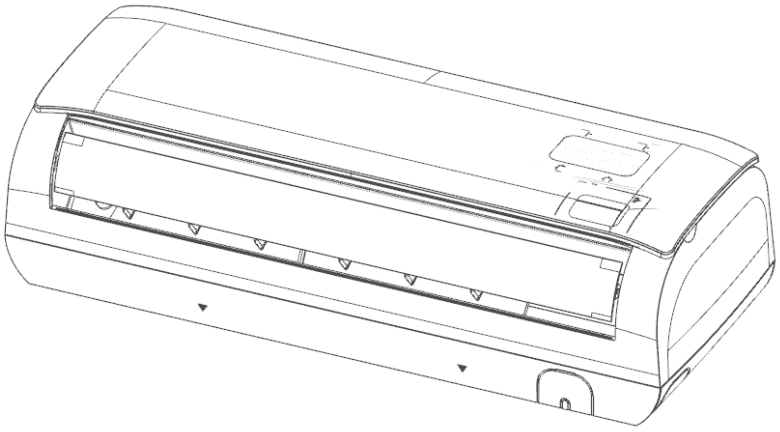	
2.Remove the front panel			
1	Hold the front panel by the tabs on the both sides and lift it	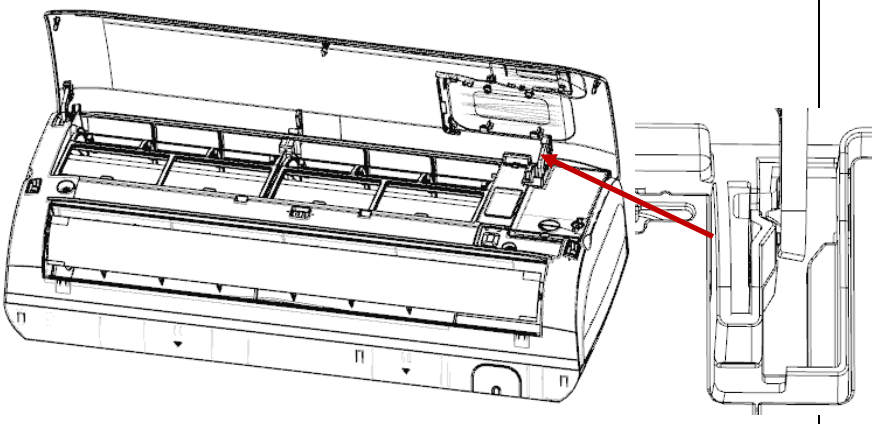	

Step		Procedure	Points
2	1. Loosen the screw and lift up the casing cover 2.Lift up the cssing cover	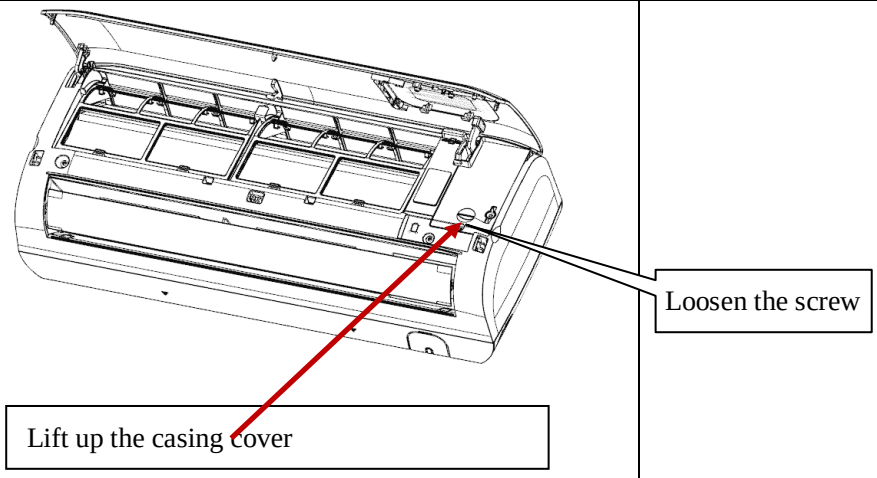	
3.	Pull the Harness out of the control box and then release the pivots on both sides of the unit to remove the front panel	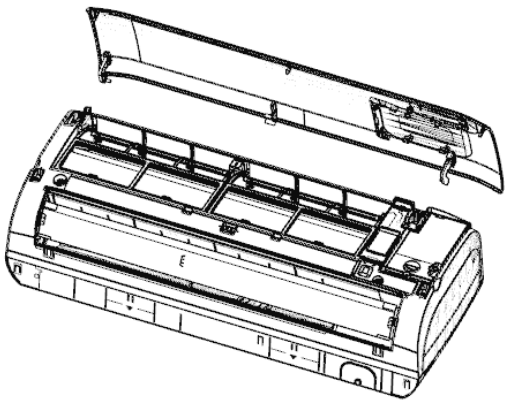	

Remove the air filters and horizontal flap

Step		Procedure	Points
Remove the air filters			
1	Lift an air filter upwards slightly and then pull it out downwards	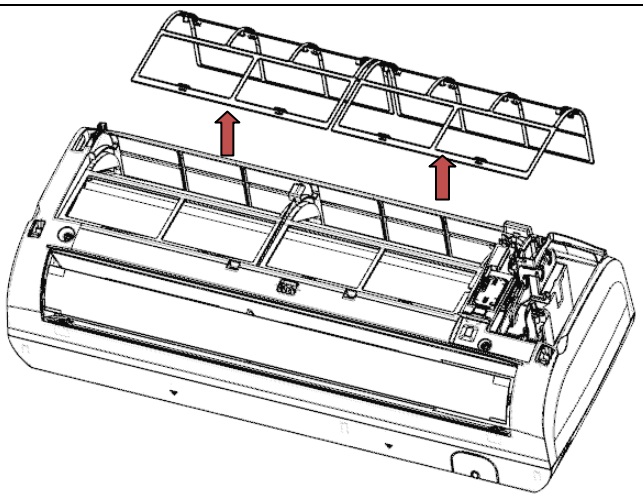	
Remove the horizontal flap			
1	Release the side of pivot and then Release the Center of the pivot. Bend the horizontal blade slightly and remove it.	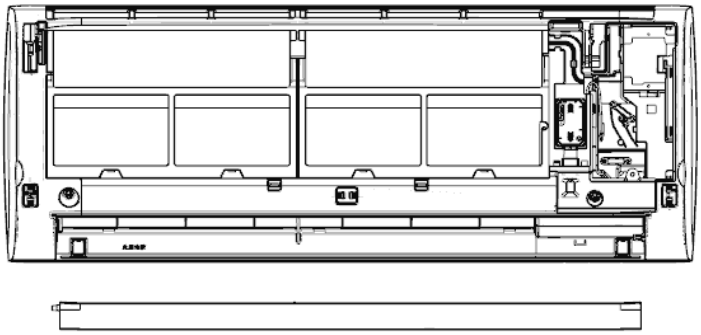	■ The horizontal flap is Single

Remove the casing

Step		Procedure	Points
1	Release the screw covers(3EA)	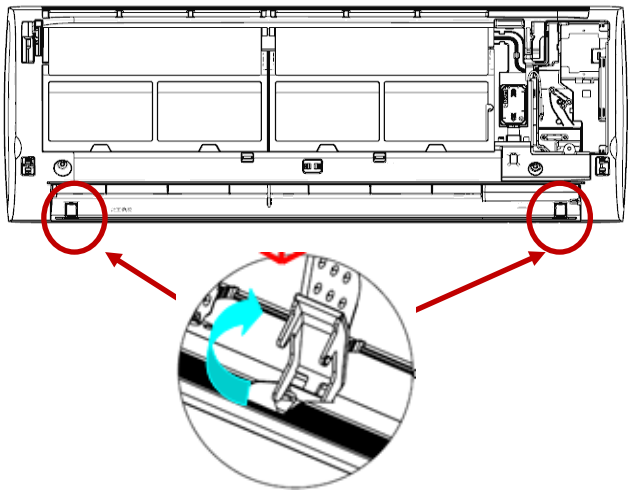	
2	Loosen the marked Screw (4EA)	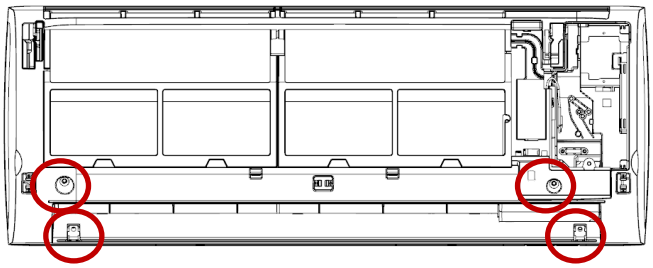	

Step		Procedure	Points
3	Release the marked hooks (3EA) and then Pull the front grille out Horizontally and remove it	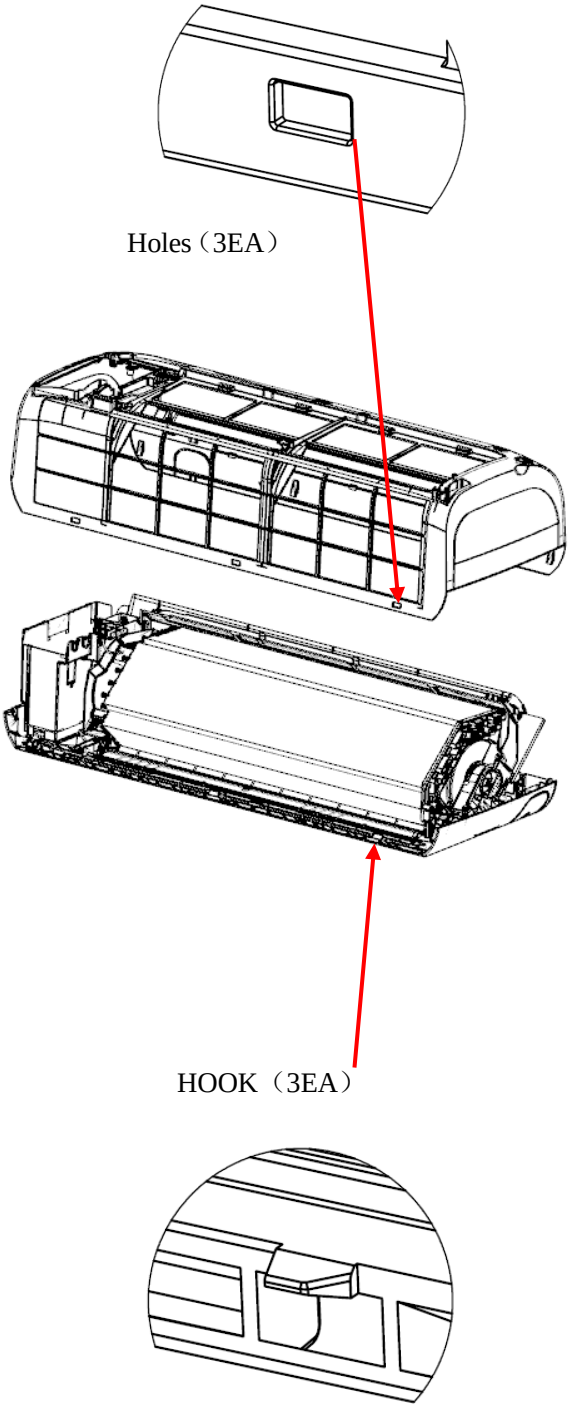	■When assembling install the front grille horizontally so as not to stuff the flap inside. ■When assembling, make sure these three hooks are caught properly.

Release stepping motor and control box

Step		Procedure	Points
1	Pull the Harness out of the PCB unit and then Loosen the control Box screws (2EA) . Pull the control box from of the frame and remove it.	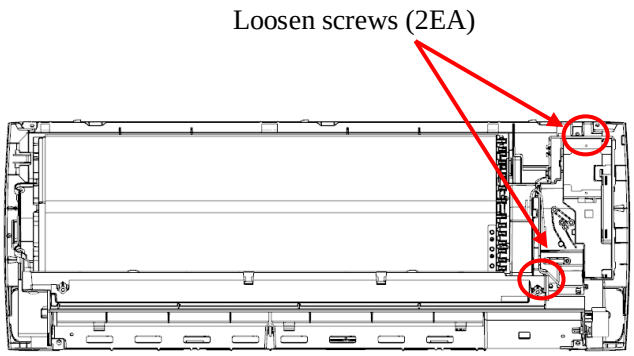 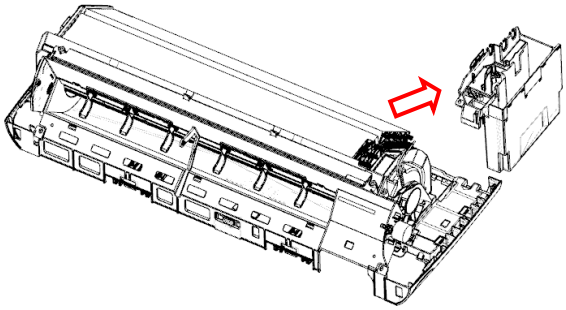	Harness: Stepping motor and fan motor harness

Release stepping motor and control box

Step		Procedure	Points
3	Loosen the stepping motor screws (2EA), and then Release the stepping motor	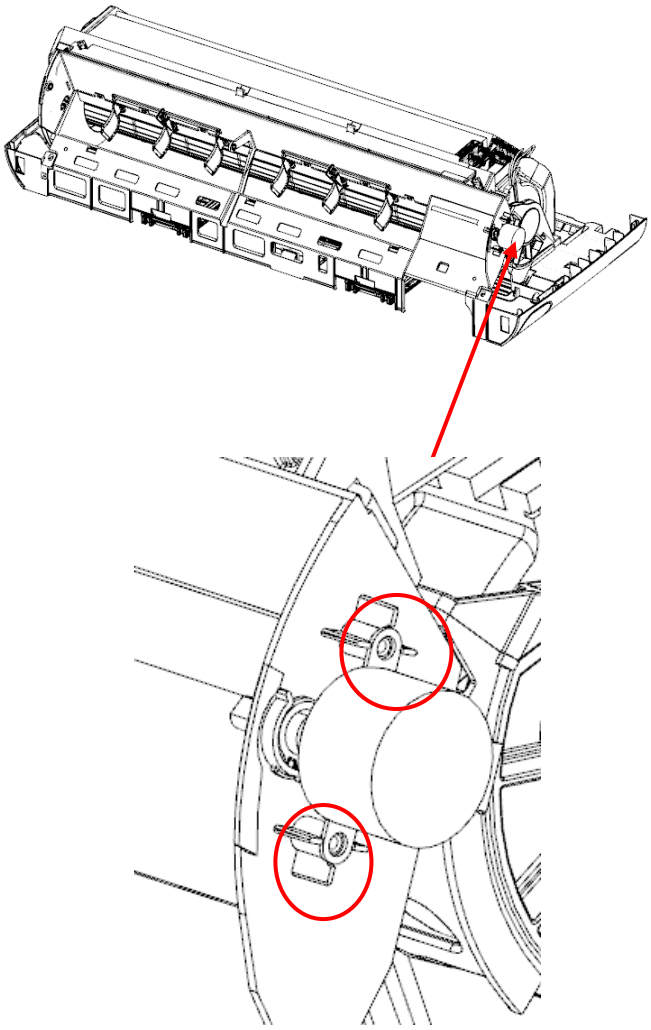	

Removal of Heat Exchanger

Step		Procedure	Points
1	Loosen the marked screw (1EA)	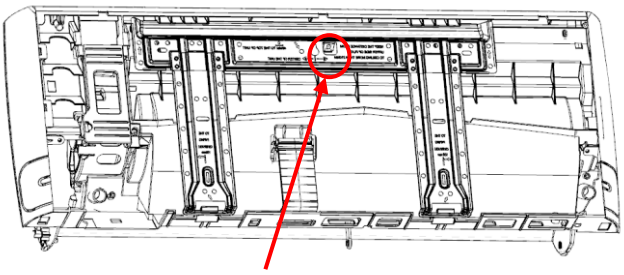 Loosen the Screw (1EA)	
2	Pull mounting plate and heat exchanger bracket out from Hook of the base frame and then release them.	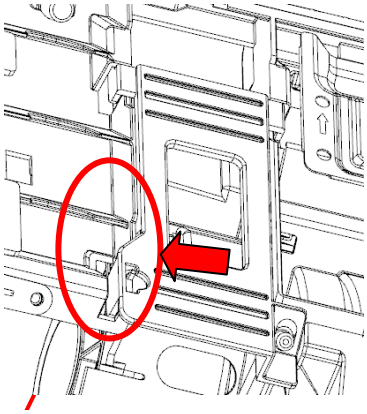 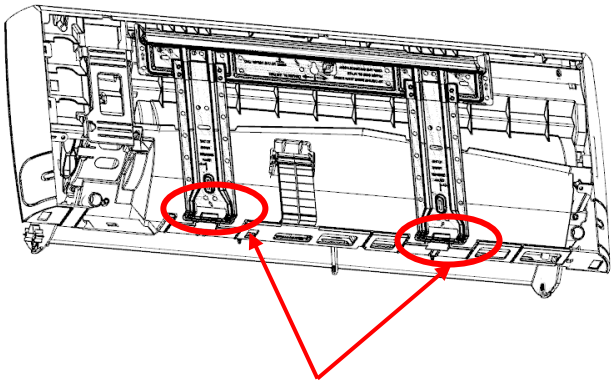 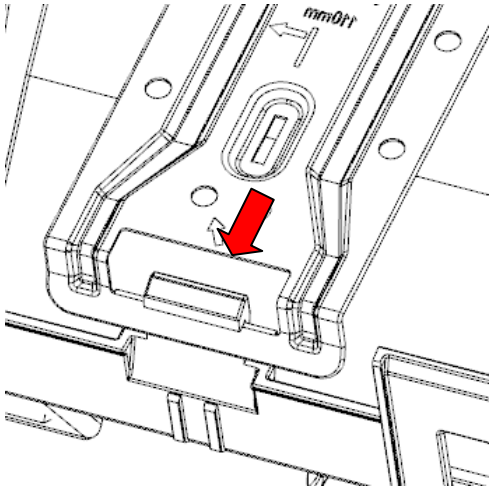	

Step		Procedure	Points
3	Release the fixture plate from the base frame hook and remove it.	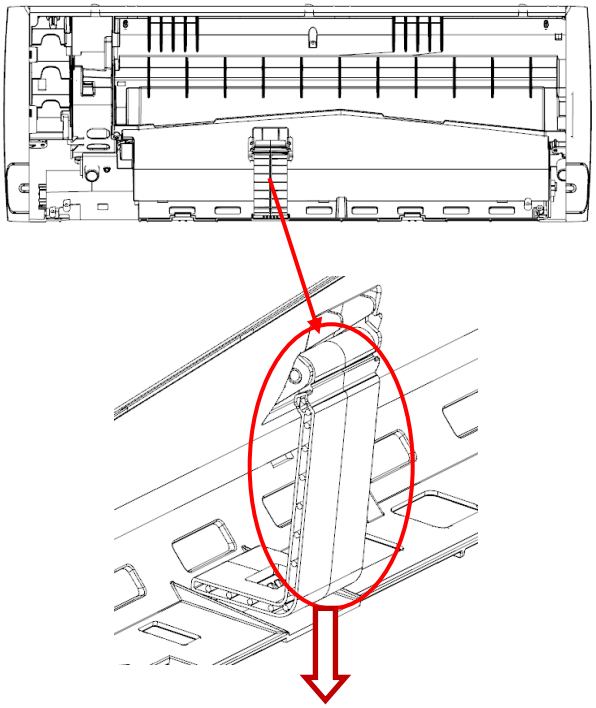 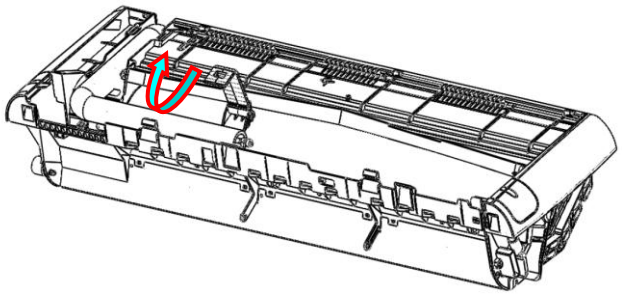	

Step		Procedure	Points
4	Loosen the marked screws (4EA). And then Remove the heat exchanger	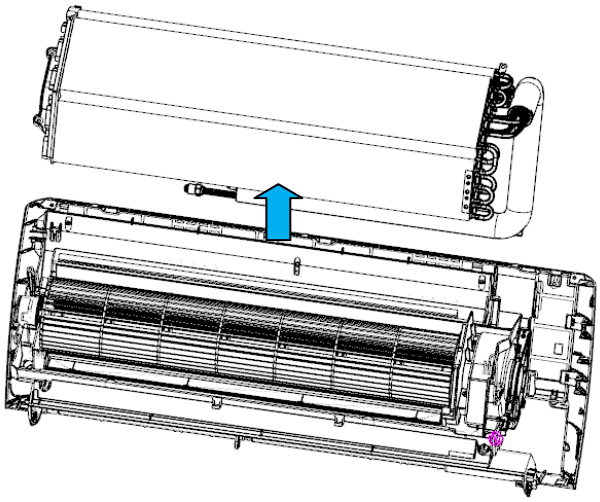	
Remove Fan Motor			
1	Loosen the marked screws(4EA) and release the cover of fan motor	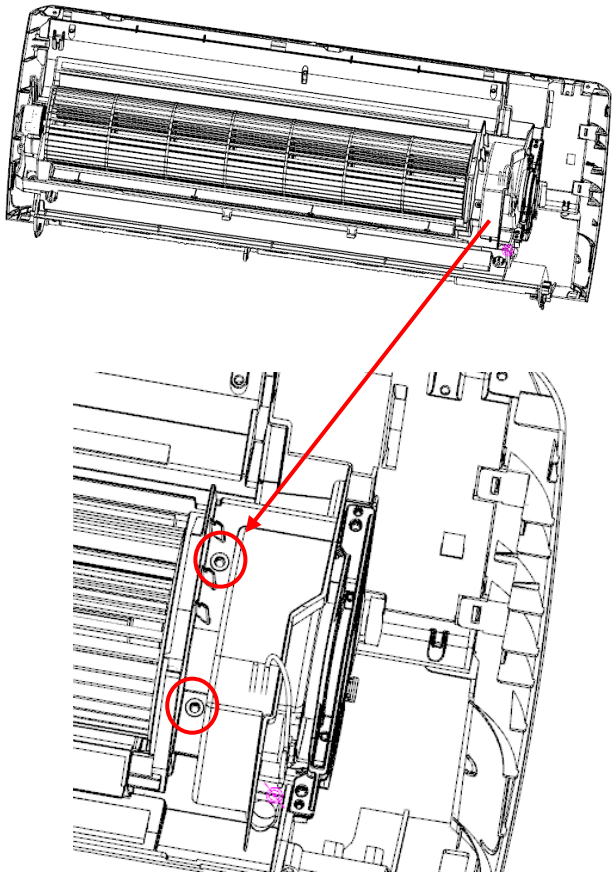	

Step		Procedure	Points
1	Loosen the marked screw (2EA) of fan motor up bracket and remove it	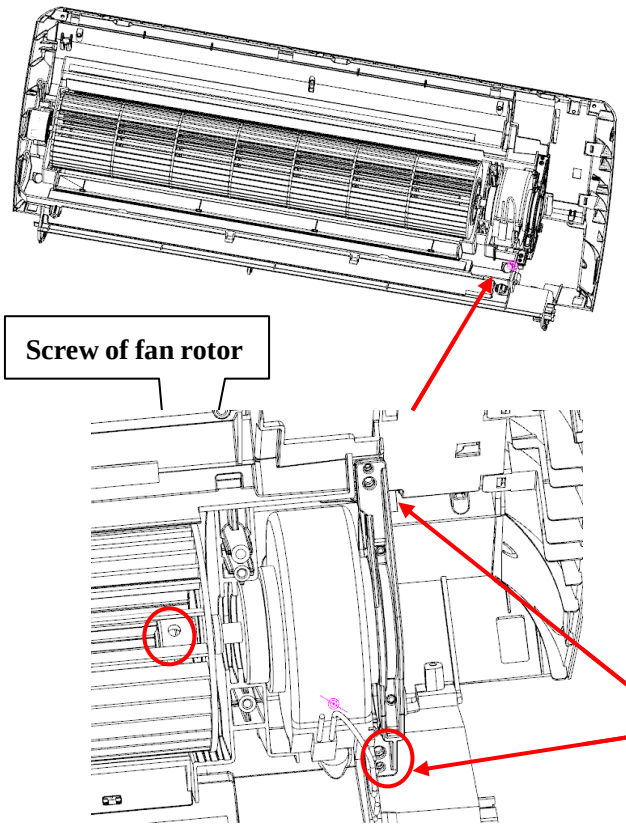	Screw of Fan Motor up bracket
2	Loosen the marked screw (1EA) of fan motor and remove fan motor and remove it	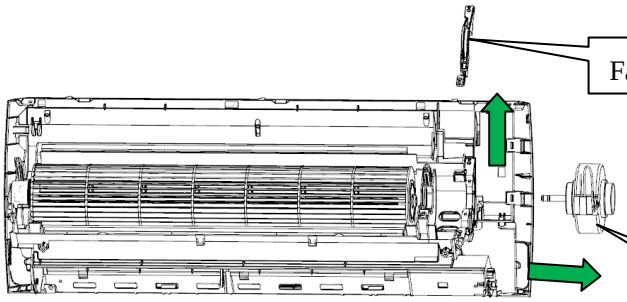	

Step		Procedure	Points
3	Lift up the right part of the fan and remove it	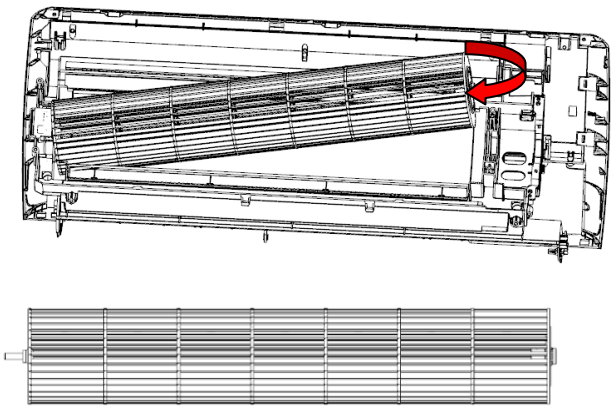	
Remove horizontal louver and fan motor bracket			
1	Release the marked hooks (4EA) and then Pull the guide air plate and remove it Two blades assemble The guide air pltate then remove it	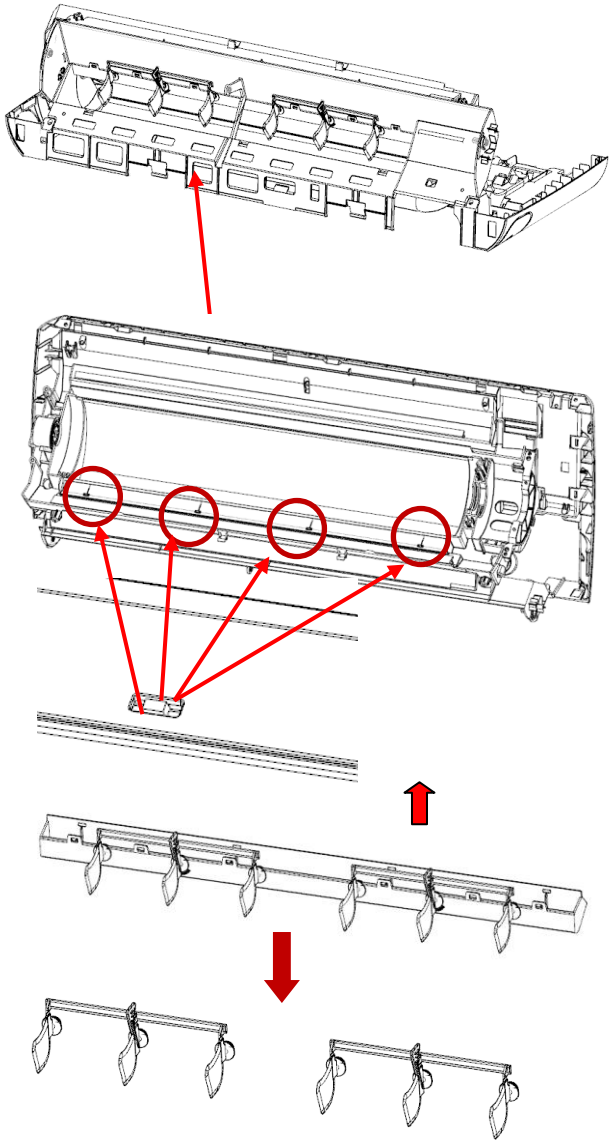	

Remove fan motor bracket and fan bearing

Step		Procedure	Points
1	Pull the hook of fan motor bracket and upward remove it	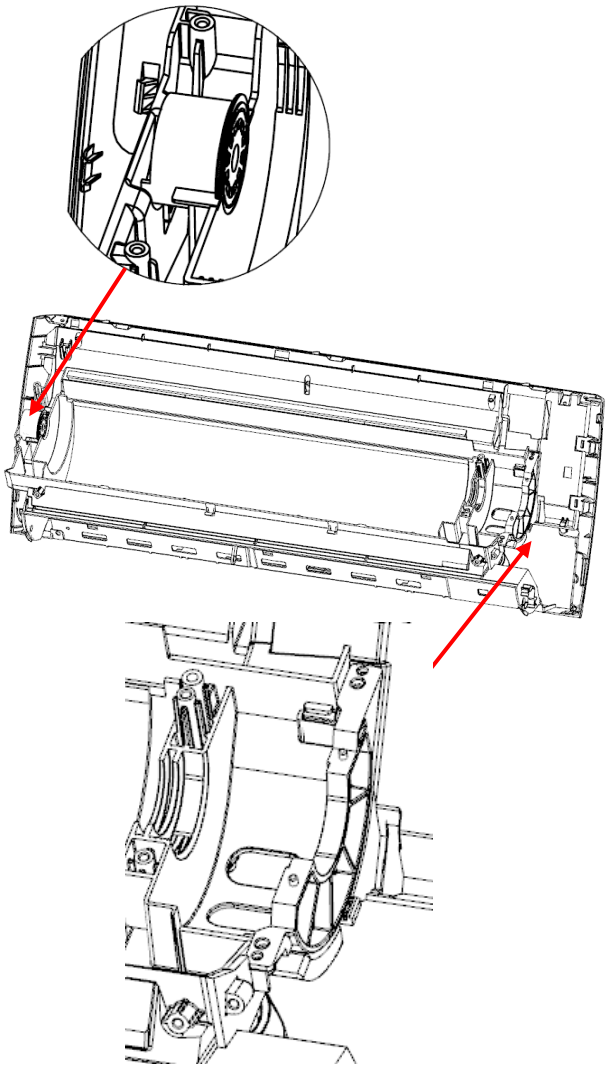	
2	Pull the hook of bearing bracket and upward remove it	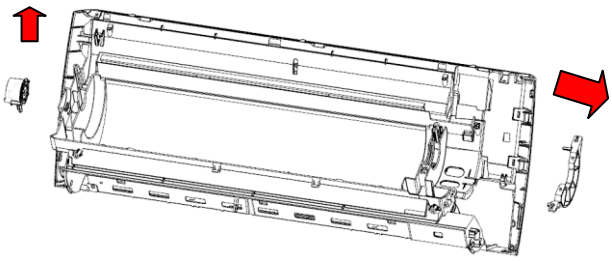	

Remove frame work board

Step		Procedure	Points
1	Loosen the marked screw of frame work board	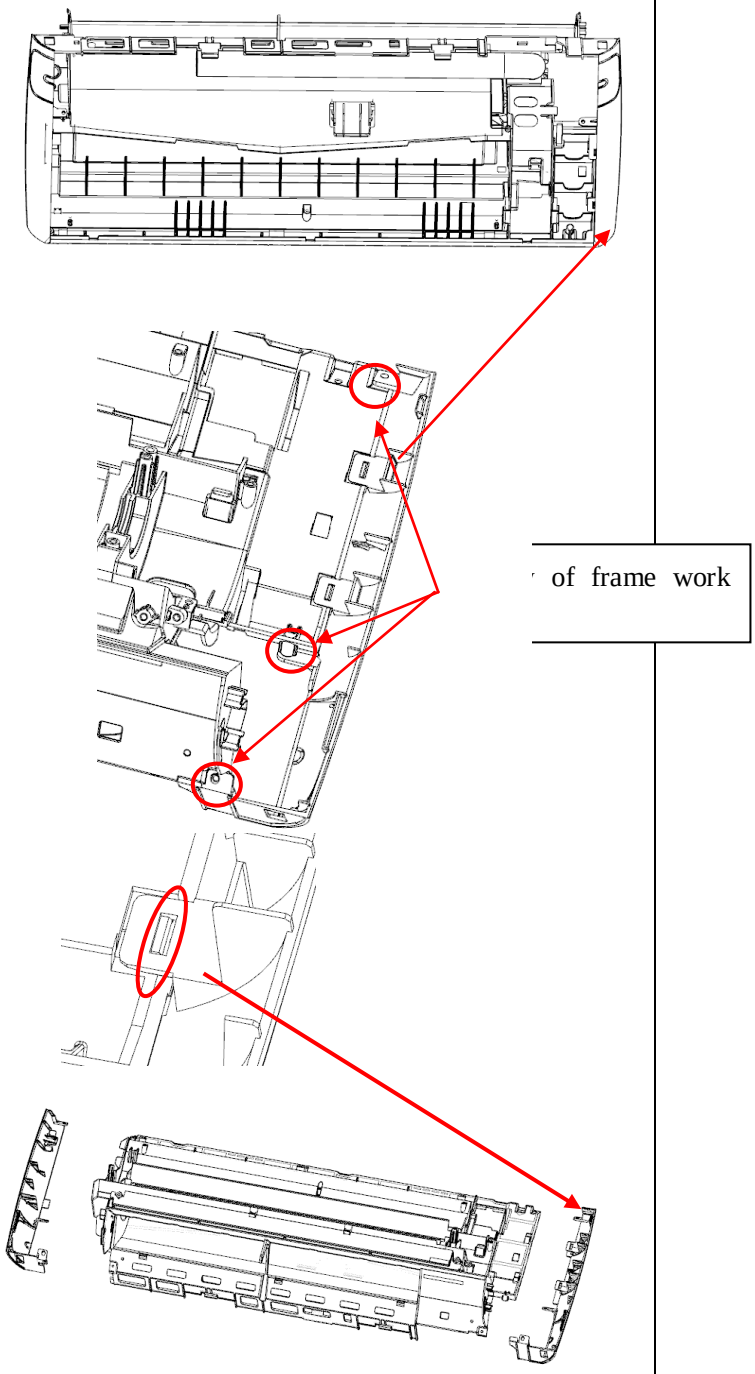	
2	Pull the hook of frame work board, remove it		

Remove drain pipe and drain pipe stem

Step		Procedure	Points
1	Loosen the marked screw of drain pipe and then remove it	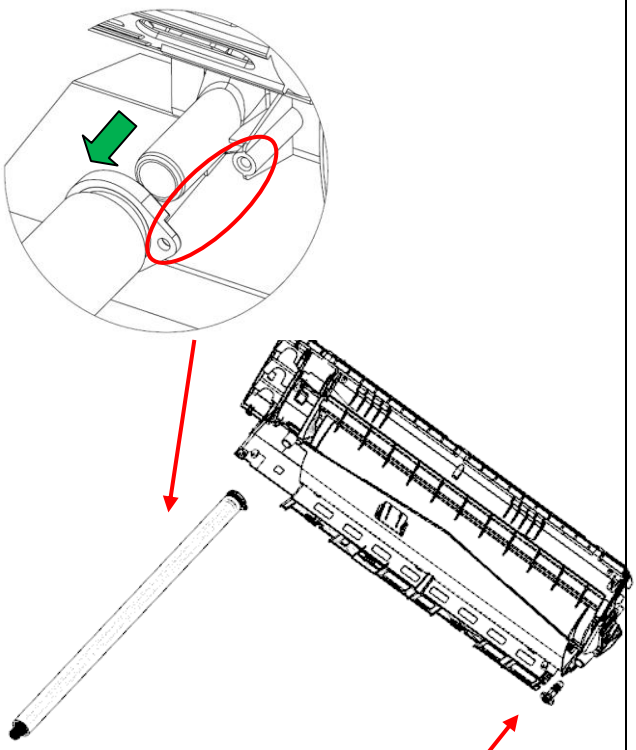	
2	Pull the drain pipe stem from base frame and the remove it	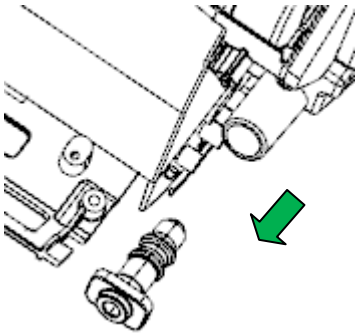	

Sincere Forever